# Lecture 3. Solving Linear Systems

University of British Columbia, Vancouver

Yue-Xian Li

February 5, 2019

## 3.1 Examples and geometric meaning of solutions

**Def:** A system of $m$ equations and $n$ unknowns can be generally expressed as

$$\begin{cases} a_{11}x_1 + a_{12}x_2 + \cdots + a_{1n}x_n = b_1, \\ a_{21}x_1 + a_{22}x_2 + \cdots + a_{2n}x_n = b_2, \\ \vdots \\ a_{m1}x_1 + a_{m2}x_2 + \cdots + a_{mn}x_n = b_m, \end{cases} \tag{3.1.1}$$

where $a_{ij},\ b_i, (1 \leq i \leq m,\ ,1 \leq j \leq n)$ are typically known scalars in $\mathbb{R}$. $x_j,\ (1 \leq j \leq n)$ are supposed to be the unknowns to be solved. Subscripts of the coefficients $a_{ij}$ are defined by

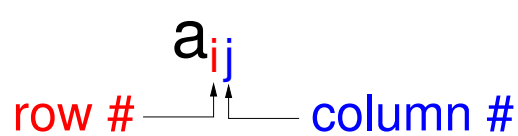


The unknowns are denoted by $x_1,\ x_2,\ \cdots, x_n$ but not $x,\ y,\ z,\ \cdots$ because when $n$ is large, we run out of letters.

**Eg:** Horse and donkey are carrying potato bags for their master. Donkey complains carrying too many and wants to transfer one bag to horse. Horse tells the truth: "If you gave me one, I would be carrying twice as many as you do. If I gave you one, we would be carrying the same number." How many bags each are carrying now?

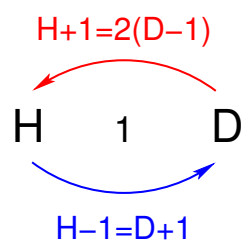


**Ans:** Let $\begin{cases} x_1 = \#\text{ of bags by H;} \\ x_2 = \#\text{ of bags by D.} \end{cases}$

According to the schematic diagram, we obtain a linear system of 2 equations with 2 unknowns $x_1,\ x_2$

$$\begin{cases} x_1 - 2x_2 = -3, & (1) \\ x_1 - x_2 = 2. & (2) \end{cases}$$

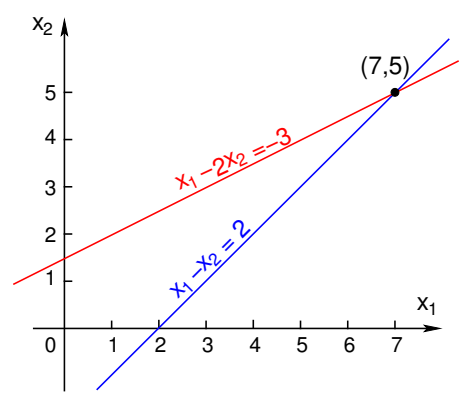


**Geometry**:
Each equation=a line in $\mathbb{R}^2$.
Solution=point of intersection between the two.

Three possible outcomes in solving a linear system of 2 equations and 2 unknowns in $\mathbb{R}^2$:

(1) If the two lines $L_1$, $L_2$ are not parallel, a unique solution=point of intersection between them;

(2) If they are parallel but not on top of each other, no point of intersection, i.e. no solution;

(3) If they are on top of each other, then all points on the line are solutions, i.e. infinitely many solutions.

## 3.2 Solving a system using Gaussian elimination

**Eg 3.2.1:** Use Gaussian elimination to solve $\begin{cases} x_1 - 2x_2 = -3, & (1) \\ x_1 - x_2 = 2. & (2) \end{cases}$

**Basic idea behind Gaussian elimination (GE):** adding an equal quantity to two sides of an equation does not disturb the equality of the two sides.

Given that $\begin{cases} lhs_1 = rhs_1, & (1) \\ lhs_2 = rhs_2, & (2) \end{cases}$, we know that

(1) $\alpha lhs_i = \alpha rhs_i, \qquad (i = 1, 2,\ \alpha \text{ is a scalar});$

(2) $lhs_1 \pm lhs_2 = rhs_1 \pm rhs_2;$

(3) $lhs_1 \pm \alpha lhs_2 = rhs_1 \pm \alpha rhs_2, \qquad (\alpha \text{ is a scalar});$

(4) $\alpha lhs_1 \pm \beta lhs_2 = \alpha rhs_1 \pm \beta rhs_2, \qquad (\alpha, \beta \text{ are scalars}).$

Now, execute GE. **Step 1:** Eliminate $x_1$ in (2).

$$\begin{cases} x_1 - 2x_2 = -3, & (1) \\ x_1 - x_2 = 2. & (2) \end{cases} \xrightarrow{(2)=(2)-(1)} \begin{cases} x_1 - 2x_2 = -3, & (1) \\ x_2 = 5. & (2) \end{cases}$$

**Step 2:** Back substitute $x_2 = 5$ into (1) to solve $x_1$.

$$\xrightarrow{x_2=5 \text{ into } (1)} \quad x_1 - 2(5) = -3, \quad \longrightarrow \quad x_1 = 10 - 3 = 7.$$

**Eg 3.2.2:** Use GE to solve $\begin{cases} x_1 + x_2 + x_3 = 4, & (1) \\ x_1 + 2x_2 + 3x_3 = 9, & (2) \\ 2x_1 + 3x_2 + x_3 = 7, & (3) \end{cases}$

**Ans: Step 1:** Eliminate $x_1$ in (2), (3).
(Drop the equation number for simplicity!)

$$\begin{cases} x_1 + x_2 + x_3 = 4, \\ x_1 + 2x_2 + 3x_3 = 9, \\ 2x_1 + 3x_2 + x_3 = 7, \end{cases} \xrightarrow[(3)=(3)-2(1)]{(2)=(2)-(1)} \begin{cases} x_1 + x_2 + x_3 = 4, \\ x_2 + 2x_3 = 5, \\ x_2 - x_3 = -1, \end{cases}$$

**Step 2:** Eliminate $x_2$ in (3).

$$\xrightarrow{(3)=(3)-(2)} \begin{cases} x_1 + x_2 + x_3 = 4, \\ x_2 + 2x_3 = 5, \\ -3x_3 = -6, \end{cases} \longrightarrow \quad x_3 = 2.$$

**Step 2:** Back-substitute $x_3$ in (2) and then $x_2,\ x_3$ in (1).

$$\xrightarrow{x_3=2 \text{ in } (2)} \begin{cases} x_1 + x_2 + x_3 = 4, \\ x_2 + 2(2) = 5, \\ x_3 = 2, \end{cases} \longrightarrow \quad x_2 = 1.$$

$$\xrightarrow[x_2=1 \text{ in } (1)]{x_3=2 \text{ in } (1)} \begin{cases} x_1 + (1) + (2) = 4, \\ x_2 = 1, \\ x_3 = 2, \end{cases} \longrightarrow \quad x_1 = 1.$$

## How matrix algebra could have been discovered by you?

Imagine that you are hired as a clerk in an equation solving company and your job is to use GE to solve linear systems 8 hours a day and year after year!

After probably less than a month, you'll realize that copying $x_1, \cdots, x_n$ in each step is a complete waste of time! You might as well do the elimination on just the coefficients of them while keeping the numbers positioned at exactly where they are supposed to locate. Anybody including yourself could have invented the *augmented matrix* as follows.

**Eg 3.2.3:** Use GE to solve $\begin{cases} 2x_1 + x_2 + 3x_3 = 1, \\ 4x_1 + 5x_2 + 7x_3 = 7, \\ 2x_1 - 5x_2 + 5x_3 = -7. \end{cases}$

**Ans:** Set up the following augmented matrix and do GE.

$$\left[\begin{array}{ccc|c} 2 & 1 & 3 & 1 \\ 4 & 5 & 7 & 7 \\ 2 & -5 & 5 & -7 \end{array}\right] \xrightarrow[(3)=(3)-(1)]{(2)=(2)-2(1)} \left[\begin{array}{ccc|c} 2 & 1 & 3 & 1 \\ 0 & 3 & 1 & 5 \\ 0 & -6 & 2 & -8 \end{array}\right]$$

$$\xrightarrow[\text{inverse triangle}]{(3)=(3)+2(2)} \left[\begin{array}{ccc|c} 2 & 1 & 3 & 1 \\ 0 & 3 & 1 & 5 \\ 0 & 0 & 4 & 2 \end{array}\right] \xrightarrow[\text{substitution}]{\text{Back}} \left[\begin{array}{c} x_1 = -1 \\ x_2 = \frac{3}{2} \\ x_3 = \frac{1}{2} \end{array}\right].$$

- The above inverse triangular form is also called the *row echelon form* (REF).
- This example shows **Possibility #1**, i.e. yielding one unique solution.
- Geometrically, the 3 planes described by the 3 equations intersect at one single point.

**Eg 3.2.4:** Use augmented matrix to solve $\begin{cases} x_1 + x_2 + x_3 = 1, \\ x_1 + 2x_2 + 3x_3 = 1, \\ 2x_1 + 3x_2 + 4x_3 = 2. \end{cases}$

**Ans:**

$$\left[\begin{array}{ccc|c} 1 & 1 & 1 & 1 \\ 1 & 2 & 3 & 1 \\ 2 & 3 & 4 & 2 \end{array}\right] \xrightarrow[(3)=(3)-2(1)]{(2)=(2)-(1)} \left[\begin{array}{ccc|c} 1 & 1 & 1 & 1 \\ 0 & 1 & 2 & 0 \\ 0 & 1 & 2 & 0 \end{array}\right]$$

$$\xrightarrow[\text{REF}]{(3)=(3)-(2)} \left[\begin{array}{ccc|c} 1 & 1 & 1 & 1 \\ 0 & 1 & 2 & 0 \\ 0 & 0 & 0 & 0 \end{array}\right] \xrightarrow[\text{substitution}]{\text{Back}} \begin{bmatrix} x_1 = 1 + t \\ x_2 = -2t \\ x_3 = t \end{bmatrix}.$$

$$\text{Thus, } \vec{x} = \begin{bmatrix} x_1 \\ x_2 \\ x_3 \end{bmatrix} = \begin{bmatrix} 1+t \\ -2t \\ t \end{bmatrix} = t \begin{bmatrix} 1 \\ -2 \\ 1 \end{bmatrix} + \begin{bmatrix} 1 \\ 0 \\ 0 \end{bmatrix}.$$

- The is a line with a direction $(1, -2, 1)$ and a point $(1, 0, 0)$ on it. Every point on it is a solution!
- This example shows **Possibility #2**, i.e. yielding infinitely many solutions
- Geometrically, the 3 planes intersect in one line.

**Eg 3.2.5:** Use augmented matrix to solve $\begin{cases} x_1 + x_2 + x_3 = 1, \\ x_1 + 2x_2 + 2x_3 = 2, \\ 2x_1 + 3x_2 + 3x_3 = 4. \end{cases}$

**Ans:**

$$\left[\begin{array}{ccc|c} 1 & 1 & 1 & 1 \\ 1 & 2 & 2 & 2 \\ 2 & 3 & 3 & 4 \end{array}\right] \xrightarrow[(3)=(3)-2(1)]{(2)=(2)-(1)} \left[\begin{array}{ccc|c} 1 & 1 & 1 & 1 \\ 0 & 1 & 1 & 1 \\ 0 & 1 & 1 & 2 \end{array}\right]$$

$$\xrightarrow[\text{REF}]{(3)=(3)-(2)} \left[\begin{array}{ccc|c} 1 & 1 & 1 & 1 \\ 0 & 1 & 1 & 1 \\ 0 & 0 & 0 & 1 \end{array}\right] \xrightarrow[\text{Contradiction!}]{0=1!} \text{No solution!}$$

- This example shows **Possibility #3**, i.e. no solution!
- Geometrically, the 3 planes have no common point of intersection.

## Some other applications of GE

**OEg1:** Check if $\vec{a} = \begin{bmatrix} 1 \\ 2 \\ 3 \end{bmatrix}$, $\vec{b} = \begin{bmatrix} 1 \\ -3 \\ 1 \end{bmatrix}$, $\vec{c} = \begin{bmatrix} 2 \\ -1 \\ 4 \end{bmatrix}$ are LI.

**Ans:** One can always check if $V_{ppiped} = \left|\vec{a} \cdot (\vec{b} \times \vec{c})\right|$ is zero. Since GE maintains the linear dependency of the columns of a matrix, one can alway use GE to obtain the REF and check if the columns are LI.

Put the 3 vectors into the **columns** of the following matrix.

$$\begin{bmatrix} 1 & 1 & 2 \\ 2 & -3 & -1 \\ 3 & 1 & 4 \end{bmatrix} \xrightarrow[(3)=(3)-3(1)]{(2)=(2)-2(1)} \begin{bmatrix} 1 & 1 & 2 \\ 0 & -5 & -5 \\ 0 & -2 & -2 \end{bmatrix}$$

$$\xrightarrow[(3)=(3)/(-2)]{(2)=(2)/(-5)} \begin{bmatrix} 1 & 1 & 2 \\ 0 & 1 & 1 \\ 0 & 1 & 1 \end{bmatrix} \xrightarrow[\text{REF}]{(3)=(3)-(2)} \begin{bmatrix} 1 & 1 & 2 \\ 0 & 1 & 1 \\ 0 & 0 & 0 \end{bmatrix}.$$

Now, it is obvious that column#1+column#2=column#3 or $C_1 + C_2 = C_3$, which implies that $\vec{c} = \vec{a} + \vec{b}$ which is obvious now after we have found the linear relation in REF. Thus, they are LD and not LI.

**OEg2:** For the same vectors $\vec{a}$, $\vec{b}$, $\vec{c}$ defined in previous example, find a LC of them such that

$$\alpha_1\vec{a} + \alpha_2\vec{b} + \alpha_3\vec{c} = \vec{d} = \begin{bmatrix} 1 \\ 7 \\ 5 \end{bmatrix}.$$

**Ans:** $\alpha_1 \begin{bmatrix} 1 \\ 2 \\ 3 \end{bmatrix} + \alpha_2 \begin{bmatrix} 1 \\ -3 \\ 1 \end{bmatrix} + \alpha_3 \begin{bmatrix} 2 \\ -1 \\ 4 \end{bmatrix} = \begin{bmatrix} 1 \\ 7 \\ 5 \end{bmatrix} \quad \Rightarrow$

$$\begin{bmatrix} \alpha_1 + \alpha_2 + 2\alpha_3 \\ 2\alpha_1 - 3\alpha_2 - \alpha_3 \\ \alpha_3 1 + \alpha_2 + 4\alpha_3 \end{bmatrix} = \begin{bmatrix} 1 \\ 7 \\ 5 \end{bmatrix} \quad \Rightarrow \quad \begin{cases} \alpha_1 + \alpha_2 + 2\alpha_3 = 1, \\ 2\alpha_1 - 3\alpha_2 - \alpha_3 = 7, \\ 3\alpha_1 + \alpha_2 + 4\alpha_3 = 5. \end{cases}$$

Using GE on the augment matrix, one can solve the system.

$$\left[\begin{array}{ccc|c} 1 & 1 & 2 & 1 \\ 2 & -3 & -1 & 7 \\ 3 & 1 & 4 & 5 \end{array}\right] \xrightarrow[(3)=(3)-3(1)]{(2)=(2)-2(1)} \left[\begin{array}{ccc|c} 1 & 1 & 2 & 1 \\ 0 & -5 & -5 & 5 \\ 0 & -2 & -2 & 2 \end{array}\right]$$

$$\xrightarrow[(3)=(3)/(-2)]{(2)=(2)/(-5)} \left[\begin{array}{ccc|c} 1 & 1 & 2 & 1 \\ 0 & 1 & 1 & -1 \\ 0 & 1 & 1 & -1 \end{array}\right] \xrightarrow[\text{REF}]{(3)=(3)-(2)} \left[\begin{array}{ccc|c} 1 & 1 & 2 & 1 \\ 0 & 1 & 1 & -1 \\ 0 & 0 & 0 & 0 \end{array}\right].$$

Thus, $\begin{bmatrix} \alpha_1 \\ \alpha_2 \\ \alpha_3 \end{bmatrix} = \begin{bmatrix} -t+2 \\ -t-1 \\ t \end{bmatrix} \xrightarrow[t=0]{\text{for simplicity}} \begin{bmatrix} 2 \\ -1 \\ 0 \end{bmatrix}.$

There are infinitely many solutions. We only need one, so pick the one at $t = 0$!

**OEg3:** Given $y = f(x) = ax^2 + bx + c$ and that $(x, y) = (1, 6), (2, 11), (0, 5)$ are 3 points on the curve of $f(x)$. Find $f(x)$.

**Ans:** Substitute the 3 points into the function, one get the following system.

$$\begin{cases} a + b + c = 6, \\ 4a + 2b + c = 11, \\ c = 5. \end{cases}$$

Using GE on the augment matrix, one can solve the system.

$$\left[\begin{array}{ccc|c} 1 & 1 & 1 & 6 \\ 4 & 2 & 1 & 11 \\ 0 & 0 & 1 & 5 \end{array}\right] \xrightarrow{(2)=(2)-4(1)} \left[\begin{array}{ccc|c} 1 & 1 & 1 & 6 \\ 0 & -2 & -3 & -13 \\ 0 & 0 & 1 & 5 \end{array}\right]$$

$$\xrightarrow[\text{REF}]{(2)=(2)/(-2)} \left[\begin{array}{ccc|c} 1 & 1 & 1 & 6 \\ 0 & 1 & \frac{3}{2} & \frac{13}{2} \\ 0 & 0 & 1 & 5 \end{array}\right] \xrightarrow[\text{substitution}]{\text{Back}} \left[\begin{array}{c} a = 2 \\ b = -1 \\ c = 5 \end{array}\right].$$

Thus, the function is $f(x) = 2x^2 - x + 5$.

**OEg4:** Given two lines

$$\mathrm{L}_1: \quad \vec{x} = \begin{bmatrix} 9+t \\ 11+2t \\ 12-2t \end{bmatrix}, \qquad \mathrm{L}_2: \quad \vec{x} = \begin{bmatrix} 9-s \\ 17-4s \\ s+p \end{bmatrix},$$

where $s,\ t$ are parameters, $p$ is a scalar to be determined.

(a) For $p =?$, $L_1$ and $L_2$ intersect with each other.

(b) For $p =?$, $L_1$ and $L_2$ do not intersect.

**Ans:**

(a) At the point of intersection (if any)

$$\begin{bmatrix} 9+t \\ 11+2t \\ 12-2t \end{bmatrix} = \begin{bmatrix} 9-s \\ 17-4s \\ s+p \end{bmatrix} \longrightarrow \begin{bmatrix} s+t \\ 4s+2t \\ -s-2t \end{bmatrix} = \begin{bmatrix} 0 \\ 6 \\ p-12 \end{bmatrix}$$

Use GE on the augment matrix to solve the system.

$$\left[\begin{array}{cc|c} 1 & 1 & 0 \\ 4 & 2 & 6 \\ -1 & -2 & p-12 \end{array}\right] \xrightarrow[(3)=(3)+(1)]{(2)=(2)-4(1)} \left[\begin{array}{cc|c} 1 & 1 & 0 \\ 0 & -2 & 6 \\ 0 & -1 & p-12 \end{array}\right]$$

$$\xrightarrow[(3)=(3)/(-1)]{(2)=(2)/(-2)} \left[\begin{array}{cc|c} 1 & 1 & 0 \\ 0 & 1 & -3 \\ 0 & 1 & 12-p \end{array}\right] \xrightarrow[\text{REF}]{(3)=(3-(2)} \left[\begin{array}{cc|c} 1 & 1 & 0 \\ 0 & 1 & -3 \\ 0 & 0 & 15-p \end{array}\right]$$

Thus, if $p = 15$, the two intersect at $t^* = -3$, $s^* = 3$, and $\vec{x}^* = (6, 5, 18)$.

(b) For $p \neq 15$, $L_1$ and $L_2$ can not intersect.

**OEg5:** (Practice 8) Find the (shortest) distance between two lines:

$$L_1: \quad \vec{x} = s\begin{bmatrix}1\\1\\1\end{bmatrix}; \qquad\qquad L_2: \quad \vec{x} = t\begin{bmatrix}1\\2\\3\end{bmatrix} + \begin{bmatrix}1\\0\\0\end{bmatrix}.$$

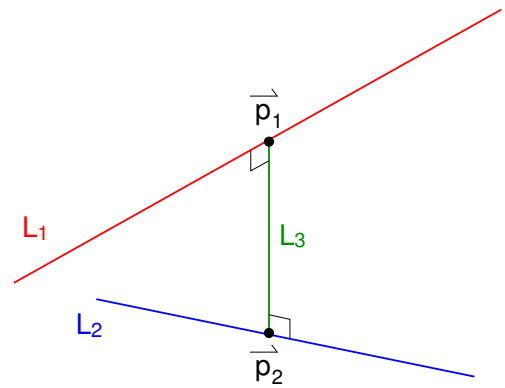


**Ans:** Shortest distance is the line, denoted by $L_3$, that connects the two and is $\perp$ to both! Thus, its direction is

$$\vec{l_3} = \begin{vmatrix}\hat{i} & \hat{j} & \hat{k}\\1 & 1 & 1\\1 & 2 & 3\end{vmatrix} = \begin{bmatrix}1\\-2\\1\end{bmatrix}.$$

Let's connect $L_3$ to the point $s(1,1,1)$ on $L_1$ with $s$ to be determined. Using the point-direction formula, the equation of $L_3$ is

$$L_3: \quad \vec{x} = r\begin{bmatrix}1\\-2\\1\end{bmatrix} + s\begin{bmatrix}1\\1\\1\end{bmatrix}, \qquad (r \text{ is a parameter.})$$

Now, connect $L_3$ to $L_2$ by making the two equations equal to each other

$$L_3 = L_2 \qquad \Rightarrow \qquad r\begin{bmatrix} 1 \\ -2 \\ 1 \end{bmatrix} + s\begin{bmatrix} 1 \\ 1 \\ 1 \end{bmatrix} = t\begin{bmatrix} 1 \\ 2 \\ 3 \end{bmatrix} + \begin{bmatrix} 1 \\ 0 \\ 0 \end{bmatrix}.$$

This gives us the linear system to solve for parameters $r,\ s,\ t$

$$r\begin{bmatrix} 1 \\ -2 \\ 1 \end{bmatrix} + s\begin{bmatrix} 1 \\ 1 \\ 1 \end{bmatrix} - t\begin{bmatrix} 1 \\ 2 \\ 3 \end{bmatrix} = \begin{bmatrix} 1 \\ 0 \\ 0 \end{bmatrix}.$$

Now, apply GE on the augmented matrix,

$$[A|\vec{b}] = \left[\begin{array}{ccc|c} 1 & 1 & -1 & 1 \\ -2 & 1 & -2 & 0 \\ 1 & 1 & -3 & 0 \end{array}\right] \xrightarrow[(3)=(3)-(1)]{(2)=(2)+2(1)} \left[\begin{array}{ccc|c} 1 & 1 & -1 & 1 \\ 0 & 3 & -4 & 2 \\ 0 & 0 & -2 & -1 \end{array}\right]$$

$$\xrightarrow[\text{Back substitution}]{t=\frac{1}{2}} \begin{bmatrix} r = \frac{1}{6} \\ s = \frac{4}{3} \\ t = \frac{1}{2} \end{bmatrix}.$$

Point of intersection on $L_1$ is $\vec{p}_1 = \frac{4}{3}(1,1,1)$ and point of intersection on $L_2$ is $\vec{p}_2 = \frac{1}{2}(1,2,3) + (1,0,0) = (\frac{3}{2}, 1, \frac{3}{2})$.

Therefore,

$$d = ||\vec{p}_2 - \vec{p}_1|| = ||(\frac{1}{6}, -\frac{2}{6}, \frac{1}{6})|| = \frac{1}{\sqrt{6}}.$$

Alternatively,

$$d = ||L_3(r = \frac{1}{6}) - L_3(r = 0)|| = ||\frac{1}{6}(1, -2, 1)|| = \frac{1}{\sqrt{6}}.$$

## 3.3 Rank and solution structure

**Def:** Rank of a matrix $[A]$ or an augmented matrix $[A|\vec{b}]$ are denoted by Rank$[A]$ and Rank$[A|\vec{b}]$, respectively, is defined as the number of nonzero rows in their respective inverse triangular form or REF.

**Eg 3.2.3:** Check back this example, one gets

$$[A|\vec{b}] = \left[\begin{array}{ccc|c} 2 & 1 & 3 & 1 \\ 0 & 3 & 1 & 5 \\ 0 & 0 & 4 & 2 \end{array}\right], \quad \text{Rank}[A] = \text{Rank}[A|\vec{b}] = 3.$$

**Possibility #1:** When Rank$[A]$ = Rank$[A|\vec{b}]$ = number of unknowns, there exists a unique solution.

**Eg 3.2.4:** Check back this example, one gets

$$[A|\vec{b}] = \left[\begin{array}{ccc|c} 1 & 1 & 1 & 1 \\ 0 & 1 & 2 & 0 \\ 0 & 0 & 0 & 0 \end{array}\right], \quad \text{Rank}[A] = \text{Rank}[A|\vec{b}] = 2 < 3.$$

**Possibility #2:** When Rank$[A]$ = Rank$[A|\vec{b}]$ < number of unknowns, there exist infinitely many solutions.

**Eg 3.2.5:** Check back this example, one gets

$$[A|\vec{b}] = \left[\begin{array}{ccc|c} 1 & 1 & 1 & 1 \\ 0 & 1 & 1 & 1 \\ 0 & 0 & 0 & 1 \end{array}\right], \quad \text{Rank}[A] = 2 \ < \ \text{Rank}[A|\vec{b}] = 3.$$

**Possibility #3:** When $\text{Rank}[A] < \text{Rank}[A|\vec{b}]$, there is no solution.

When this happens, there is inconsistency among the 3 equations such that they cannot be satisfied simultaneously.

**Conclusion:** $\text{Rank}[A] = \text{Rank}[A|\vec{b}]$ guarantees the existence of at least one solution, otherwise there is no solution. In this case, $\text{Rank}[A|\vec{b}]$ is the number of LI equations in the system, or the actual number of constraints on the solution(s), or the "codimension" of the geometric object described by the system.

## 3.4 Homogeneous vs Nonhomogeneous

For a linear system of 3 equations and 4 unknowns

$$(3.4.1) \qquad \begin{cases} x_1 + 2x_2 + x_3 + 2x_4 = b_1, \\ 2x_1 + 4x_2 + 4x_3 + 6x_4 = b_2, \\ 3x_1 + 6x_2 + x_3 + 4x_4 = b_4, \end{cases}$$

The augmented matrix can be expressed as

$$(3.4.2) \quad [A|\vec{b}] = \begin{bmatrix} 1 & 2 & 1 & 2 & | & b_1 \\ 2 & 4 & 4 & 6 & | & b_2 \\ 3 & 6 & 1 & 4 & | & b_3 \end{bmatrix}, \text{ where } A = \begin{bmatrix} 1 & 2 & 1 & 2 \\ 2 & 4 & 4 & 6 \\ 3 & 6 & 1 & 4 \end{bmatrix}_{3\times 4}$$

is the coefficient matrix, $\vec{b} = \begin{bmatrix} b_1 \\ b_2 \\ b_3 \end{bmatrix}_{3\times 1}$ is a vector constant.

In the linear system described by (3.4.1) or (3.4.2), if $\vec{b} = \vec{0}$, then the system is *homogeneous*. Otherwise, it is *nonhomogeneous.*

- In a homogeneous system, all terms are scalar multiples of one of the unknowns. No pure scalar terms can exist.
- For a homogeneous system, $[A|\vec{b}] = [A|\vec{0}]$ which guarantees $\text{Rank}[A] = \text{Rank}[A|\vec{b}]$. Thus, there is at least one solution, i.e. $\vec{x} = \vec{0}$, for any homogeneous system.

Generally speaking, if $[A]$ is the coefficient matrix of any linear system and $[A|\vec{b}]$ is the corresponding augmented matrix, then

**Def:** The system is homogeneous if $\vec{b} = \vec{0}$; it is nonhomogeneous if $\vec{b} \neq \vec{0}$.

**Theorem:** For a homogenenous system

- $\text{Rank}[A] = \text{Rank}[A|\vec{b}] = \text{Rank}[A|\vec{0}]$ is guaranteed.
- $\vec{x} = \vec{0}$ is always a solution.
- If $\text{Rank}[A] = \text{Rank}[A|\vec{0}] =$ number of unknowns, $\vec{x} = \vec{0}$ is the unique solution.
- If $\text{Rank}[A] = \text{Rank}[A|\vec{0}] <$ number of unknowns, there are infinitely many solutions.

For a nonhomogenenous system

- $\text{Rank}[A] = \text{Rank}[A|\vec{b}] =$ number of unknowns, there is one unique solution.
- If $\text{Rank}[A] = \text{Rank}[A|\vec{b}] <$ number of unknowns, there are infinitely many solutions.
- If $\text{Rank}[A] < \text{Rank}[A|\vec{b}]$, there is no solution.

**Eg 3.4.1:** Solve the homogeneous system $\begin{cases} 2x_1 + 3x_2 + 4x_3 = 0, \\ 2x_1 + x_2 - x_3 = 0, \\ 6x_1 + 5x_2 + 2x_3 = 0. \end{cases}$

**Ans:**

$$[A|\vec{0}] = \left[\begin{array}{ccc|c} 2 & 3 & 4 & 0 \\ 2 & 1 & -1 & 0 \\ 6 & 5 & 2 & 0 \end{array}\right] \xrightarrow[(3)=(3)-3(1)]{(2)=(2)-(1)} \left[\begin{array}{ccc|c} 2 & 3 & 4 & 0 \\ 0 & -2 & -5 & 0 \\ 0 & -4 & -10 & 0 \end{array}\right]$$

$$\xrightarrow[\text{REF}]{(3)=(3)-2(2)} \left[\begin{array}{ccc|c} 2 & 3 & 4 & 0 \\ 0 & -2 & -5 & 0 \\ 0 & 0 & 0 & 0 \end{array}\right] \xrightarrow[\text{Back substitution}]{x_3=t} t \begin{bmatrix} \frac{7}{4} \\ -\frac{5}{2} \\ 1 \end{bmatrix}.$$

Since $\text{Rank}[A] = \text{Rank}[A|\vec{0}] = 2 < 3 =$ number of unknowns, there are infinitely many solution which forms a line that passes through the origin.

**Eg 3.4.2:** Find one parametric expression of the line $L$ defined by $\begin{cases} x - 2y + 3z = 6, \\ 2x - y + 3z = 3. \end{cases}$

**Ans:** Knowing the normals of the two planes $\vec{n}_1 = (1, -2, 3)$, $\vec{n}_2 = (2, -1, 3)$, one can always find the direction of $L$ by $\vec{l} = \vec{n}_1 \times \vec{n}_2$. Then, use the point-direction formula to find the parametric form.

Note that $L$ is the solution of the system. GE on the augment matrix is the best and easiest way of doing this.

$$[A|\vec{b}] = \left[\begin{array}{ccc|c} 1 & -2 & 3 & 6 \\ 2 & -1 & 3 & 3 \end{array}\right] \xrightarrow{(2)=(2)-2(1)} \left[\begin{array}{ccc|c} 1 & -2 & 3 & 6 \\ 0 & 3 & -3 & -9 \end{array}\right]$$

$$\xrightarrow[\text{REF}]{(2)=(2)/3} \left[\begin{array}{ccc|c} 1 & -2 & 3 & 6 \\ 0 & 1 & -1 & -3 \end{array}\right] \xrightarrow[\text{Back substitution}]{\text{z=t}} \begin{bmatrix} -t \\ t-3 \\ t \end{bmatrix}.$$

Thus,

$$\vec{x} = t \begin{bmatrix} -1 \\ 1 \\ 1 \end{bmatrix} + \begin{bmatrix} 0 \\ -3 \\ 0 \end{bmatrix} \quad \text{is the parametric form.}$$

Thus, $\text{Rank}[A] = \text{Rank}[A|\vec{b}] = 2 < 3 =$ number of unknowns. Thus, the number of parameters =3-2=1.

**Eg 3.4.3:** This is **Eg 2.8.7** revisited! Express the plane defined by $x + 2y + 3z = 6$ in parametric form.

**Ans:** In **Eg 2.8.7**, we found 3 points on the plane, used them to find two directions on the plane $\vec{l_1}$ and $\vec{l_2}$. We then used the parametric formula to get the result.

Notice that finding the parametric expression is equivalent to solving this system of equation. In this case,

$$[A|\vec{b}] = [1\ 2\ 3 \mid 6].$$

Thus, $\text{Rank}[A] = \text{Rank}[A|\vec{b}] = 1 < 3 =$ number of unknowns. The number of parameters=3-1=2.

Let $z = t,\ y = s$, then $x = 6 - 2s - 3t$. Therefore,

$$\vec{x} = \begin{bmatrix} 6 - 2s - 3t \\ s \\ t \end{bmatrix} = \begin{bmatrix} 6 \\ 0 \\ 0 \end{bmatrix} + s \begin{bmatrix} -2 \\ 1 \\ 0 \end{bmatrix} + t \begin{bmatrix} -3 \\ 0 \\ 1 \end{bmatrix}$$

is one parametric expression of the plane. There are infinitely many equivalent such expressions.

**Conclusion:**

Finding the parametric formula of a geometric object is equivalent to solving the corresponding system of equations. The number of parameters required is equal to the dimension of the object which is equal to

$$\# \text{ of unknowns - Rank}[A|\vec{b}].$$

Therefore,

$$\text{Rank}[A] = \text{Rank}[A|\vec{b}] \quad \Leftrightarrow \quad \text{at least 1 solution exists.}$$

$$\text{Rank}[A] = \text{Rank}[A|\vec{b}] = \# \text{ of LI eqns in a linear system.}$$

$$\text{Rank}[A] = \text{Rank}[A|\vec{b}] = \text{codimension of the solution.}$$

## Reduced row echelon form (RREF)

**Def:** RREF is the simplest possible REF in which the leading nonzero number in each nonzero row is 1 (a.k.a. the pivot or leading 1), other entries in the same column must all be 0. Zeroed out rows must be placed at the bottom of the matrix.

**Eg 3.4.4:** $[A|\vec{b}] = \left[\begin{array}{ccccccc|c} 1 & * & * & 0 & * & 0 & 0 & * \\ 0 & 0 & 0 & 1 & * & 0 & 0 & * \\ 0 & 0 & 0 & 0 & 0 & 1 & 0 & * \\ 0 & 0 & 0 & 0 & 0 & 0 & 1 & * \\ 0 & 0 & 0 & 0 & 0 & 0 & 0 & 0 \end{array}\right]$ is in RREF,

where $*$ stands for any scalar.

What to learn by inspecting the RREF of a linear system?

- Number of columns in [A] = number of unknowns (=7).
- Rank$[A]$ = Rank$[A|\vec{b}]$ = number of LI equations (=4).
- Number of columns in [A] not containing a pivot (leading 1) = number of parameters in solution (=3).
- In the example above, $x_5 = t,\ x_3 = s,\ x_2 = r$.

**Eg 3.4.5: Eg 3.4.1** revisited! In that example,

$$[A|\vec{0}] = \left[\begin{array}{ccc|c} 2 & 3 & 4 & 0 \\ 2 & 1 & -1 & 0 \\ 6 & 5 & 2 & 0 \end{array}\right] \xrightarrow[(3)=(3)-3(1)]{(2)=(2)-(1)} \left[\begin{array}{ccc|c} 2 & 3 & 4 & 0 \\ 0 & -2 & -5 & 0 \\ 0 & -4 & -10 & 0 \end{array}\right]$$

$$\xrightarrow[\text{REF}]{(3)=(3)-2(2)} \left[\begin{array}{ccc|c} 2 & 3 & 4 & 0 \\ 0 & -2 & -5 & 0 \\ 0 & 0 & 0 & 0 \end{array}\right].$$

It is obvious that this REF is not RREF since the leading numbers in each nonzero row are not 1 and not all entries in the same column as the leading number in the 2nd row are 0! Let's now reduce it to RREF!

$$\left[\begin{array}{ccc|c} 2 & 3 & 4 & 0 \\ 0 & -2 & -5 & 0 \\ 0 & 0 & 0 & 0 \end{array}\right] \xrightarrow[(2)=(2)/(-2)]{(1)=(1)/2} \left[\begin{array}{ccc|c} 1 & \frac{3}{2} & 2 & 0 \\ 0 & 1 & \frac{5}{2} & 0 \\ 0 & 0 & 0 & 0 \end{array}\right]$$

$$\xrightarrow[RREF]{(1)=(1)-\frac{3}{2}(2)} \left[\begin{array}{ccc|c} 1 & 0 & -\frac{7}{4} & 0 \\ 0 & 1 & \frac{5}{2} & 0 \\ 0 & 0 & 0 & 0 \end{array}\right] \quad \text{which is now in RREF!}$$

**Conclusions:**

- To turn REF into RREF: (i) make each pivot equal to 1; (ii) turn all entries above a pivot to 0.
- RREF makes it easier to find linear relation(s) between the columns of a matrix, in example above,

$$C_3 = -\frac{7}{4}C_1 + \frac{5}{2}C_2.$$

- RREF makes back substitution easier, in example above,

$$x_3 = t,\ x_2 = -\frac{5}{2}t,\ x_1 = \frac{7}{4}t.$$

**Eg 3.4.6:** Given that

$$\vec{a} = \begin{bmatrix} 2 \\ 2 \\ 6 \end{bmatrix}, \ \vec{b} = \begin{bmatrix} 3 \\ 1 \\ 5 \end{bmatrix}, \ \vec{c} = \begin{bmatrix} 4 \\ -1 \\ 2 \end{bmatrix}, \text{ and } \vec{v} = \begin{bmatrix} 6 \\ 2 \\ 10 \end{bmatrix}.$$

(a) Show with two different methods $\vec{a}$, $\vec{b}$, $\vec{c}$ are LD.

(b) Find one set of scalars $\{x_1, x_2, x_3\}$ such that $\vec{v}$ is a LC of $\vec{a}$, $\vec{b}$, $\vec{c}$, i.e.

$$x_1\vec{a} + x_2\vec{b} + x_3\vec{c} = \vec{v} \qquad (*).$$

(c) Find all possible choices of $\{x_1, x_2, x_3\}$ that satisfy eq.(*).

**Ans:**

(a) Method 1:

$$\begin{vmatrix} 2 & 2 & 6 \\ 3 & 1 & 5 \\ 4 & -1 & 2 \end{vmatrix} = 4-18+40-24-(-10)-12 = 0 \ \Rightarrow \ LD.$$

Method 2: Show that

$$x_1\vec{a}+x_2\vec{b}+x_3\vec{c} = x_1 \begin{bmatrix} 2 \\ 2 \\ 6 \end{bmatrix} + x_2 \begin{bmatrix} 3 \\ 1 \\ 5 \end{bmatrix} + x_3 \begin{bmatrix} 4 \\ -1 \\ 2 \end{bmatrix} = \vec{0}, \quad (**).$$

cab be satisfied with $\{x_1, x_2, x_3\}$ that are not all zeros. This homogeneous system can be solve by GE of its augmented matrix.

$$[A|\vec{0}] = \left[\begin{array}{ccc|c} 2 & 3 & 4 & 0 \\ 2 & 1 & -1 & 0 \\ 6 & 5 & 2 & 0 \end{array}\right] \xrightarrow[(3)-3(1)]{(2)=(2)-(1)} \left[\begin{array}{ccc|c} 2 & 3 & 4 & 0 \\ 0 & -2 & -5 & 0 \\ 0 & -4 & -10 & 0 \end{array}\right]$$

$$\xrightarrow[(3)=(3)-2(2)]{(1)=(1)/2} \left[\begin{array}{ccc|c} 1 & \frac{3}{2} & 2 & 0 \\ 0 & -2 & -5 & 0 \\ 0 & 0 & 0 & 0 \end{array}\right] \xrightarrow[REF]{(2)=(2)/(-2)} \left[\begin{array}{ccc|c} 1 & \frac{3}{2} & 2 & 0 \\ 0 & 1 & \frac{5}{2} & 0 \\ 0 & 0 & 0 & 0 \end{array}\right]$$

$$\xrightarrow[RREF]{(1)=(1)-\frac{3}{2}(2)} \left[\begin{array}{ccc|c} 1 & 0 & -\frac{7}{4} & 0 \\ 0 & 1 & \frac{5}{2} & 0 \\ 0 & 0 & 0 & 0 \end{array}\right] \xrightarrow[\text{Back substitute}]{x_3=t} \begin{bmatrix} \frac{7}{4}t \\ -\frac{5}{2}t \\ t \end{bmatrix}$$

Thus, the solution to the homogeneous system is

$$\vec{x}_h = \begin{bmatrix} x_1 \\ x_2 \\ x_3 \end{bmatrix} = t \begin{bmatrix} \frac{7}{4} \\ -\frac{5}{2} \\ 1 \end{bmatrix} = t \begin{bmatrix} 7 \\ -10 \\ 4 \end{bmatrix},$$

where the subscript $h$ represents the solution of the *homogeneous* system (**). Therefore, there exist infinitely many choices of nonzero $\vec{x}_h$ such that $x_1\vec{a}+x_2\vec{b}+x_3\vec{c} = \vec{0}$.

(b) In this case, one obviously answer can be found by noticing that $\vec{v} = 2\vec{b}$. Thus,

$$\vec{x}_p = \begin{bmatrix} x_1 \\ x_2 \\ x_3 \end{bmatrix} = \begin{bmatrix} 0 \\ 2 \\ 0 \end{bmatrix}$$

is an obvious choice. Where the subscript $p$ represents one *particular* solution to the nonhomogeneous system (*).

(c) To find all possible choices of $\{x_1, x_2, x_3\}$ that satisfy eq.(*), one need to use GE to solve the corresponding augmented matrix.

$$[A|\vec{b}] = \left[\begin{array}{ccc|c} 2 & 3 & 4 & 6 \\ 2 & 1 & -1 & 2 \\ 6 & 5 & 2 & 5 \end{array}\right] \xrightarrow[(3)-3(1)]{(2)=(2)-(1)} \left[\begin{array}{ccc|c} 2 & 3 & 4 & 6 \\ 0 & -2 & -5 & -4 \\ 0 & -4 & -10 & -8 \end{array}\right]$$

$$\xrightarrow[(3)=(3)-2(2)]{(1)=(1)/2} \left[\begin{array}{ccc|c} 1 & \frac{3}{2} & 2 & 3 \\ 0 & -2 & -5 & -4 \\ 0 & 0 & 0 & 0 \end{array}\right] \xrightarrow[REF]{(2)=(2)/(-2)} \left[\begin{array}{ccc|c} 1 & \frac{3}{2} & 2 & 3 \\ 0 & 1 & \frac{5}{2} & 2 \\ 0 & 0 & 0 & 0 \end{array}\right]$$

$$\xrightarrow[RREF]{(1)=(1)-\frac{3}{2}(2)} \left[\begin{array}{ccc|c} 1 & 0 & -\frac{7}{4} & 0 \\ 0 & 1 & \frac{5}{2} & 2 \\ 0 & 0 & 0 & 0 \end{array}\right] \xrightarrow[\text{Back substitute}]{x_3=t} \begin{bmatrix} \frac{7}{4}t \\ 2-\frac{5}{2}t \\ t \end{bmatrix}$$

Thus,

$$\vec{x} = \begin{bmatrix} x_1 \\ x_2 \\ x_3 \end{bmatrix} = \begin{bmatrix} \frac{7}{4}t \\ 2-\frac{5}{2}t \\ t \end{bmatrix} = t\begin{bmatrix} \frac{7}{4} \\ -\frac{5}{2} \\ 1 \end{bmatrix} + \begin{bmatrix} 0 \\ 2 \\ 0 \end{bmatrix} = \vec{x}_h + \vec{x}_p.$$

The fact that the general solution to the nonhomogeneous system (*) is equal to the sum of $\vec{x}_h$ (the solution to the corresponding homogeneous system) and $\vec{x}_p$ (one particular solution to the nonhomogeneous system) is NOT a coincident. It is a general rule.

**Theorem:** The solution to any linear, nonhomogeneous system represented by the augmented matrix $[A|\vec{b}]$ can always be expressed as

$$\vec{x} = \vec{x}_h + \vec{x}_p,$$

where $\vec{x}_h$ is the solution to the corresponding homogeneous system represented by $[A|\vec{0}]$ and $\vec{x}_p$ is one particular solution to the nonhomogeneous system.

- This result can be generalized to any linear equation (be it algebraic, differential, integral, integro-differential) or systems of linear equations.

## 3.5 Application to resistor networks

### 3.5.1 Elements in electronic circuits.

(1) Resistor and Ohm's Law.

**Resistor:** an element that impedes the flow of electricity causing a voltage drop following Ohm's Law.

**Ohm's Law:** $V = IR$ or voltage drop across a resister is proportional to the resistance given a constant current flow.

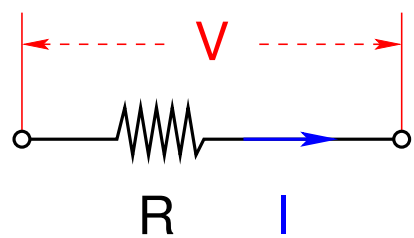


- Resistance ($R$) is measured in units of $\Omega$ (Ohm).
- Electric charge ($Q$) is measured in units of $C$ (Coulomb).
- Electric current ($I$) is measured in units of $A$ (Ampere), $1A = 1$ Coulomb per second.
- Voltage ($V$) is measured in units of $V$ (Volt).

(2) Voltage source (e.g. a battery): a unit that provides a stable voltage drop between its two electrodes.

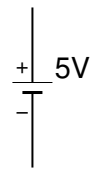


Voltage source

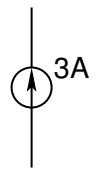


Current source

(3) Current course: a unit that provides a stable source of current.

*(4) Other electronic elements (not considered in resistor networks)

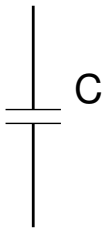


Capacitor
Unit: F (Farad)

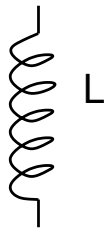


Inductor
Unit: H (Henry)

Diode
(Semiconductor)

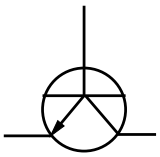

Transistor
(Semiconductor)

**3.5.2 Basic problem:** given the diagram of a resistor network, solve the current flowing through each element and the voltage drop across it.

(1) Sequential circuit: a circuit in which all resistors are connected sequentially.

Owing to the conservation of current, current flowing through each resistor remains the same in a sequential circuit. In such a network, there is only one unknown, the current $i$.

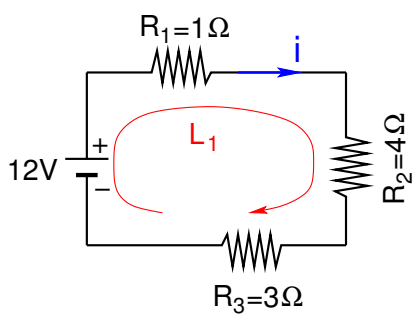


(C1)

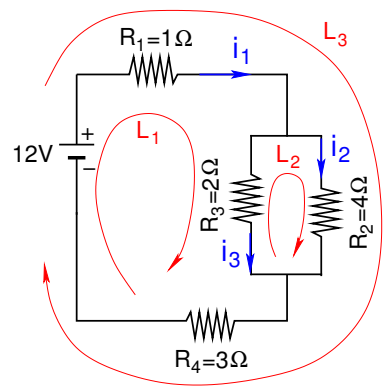


(C2)

(2) Parallel circuit: a circuit in which resistors are connected in parallel, e.g. $R_2$, $R_3$ are parallel but are sequential wrt $R_1$, $R_4$. Parallel resistors share identical voltage drop.

(3) Circuit loop in a closed resistor circuit is defined as a closed passage. In (C1), there is only 1 loop with 1 unknown current $i$. In (C2), however, one could find 3 dif-

ferent loops and 3 distinct unknown currents, $i_1,\ i_2,\ i_3$. However, only 2 out of the 3 are *independent*.

**Independent loop:** a loop is independent if at least one of its edges is never shared with another existing loop.

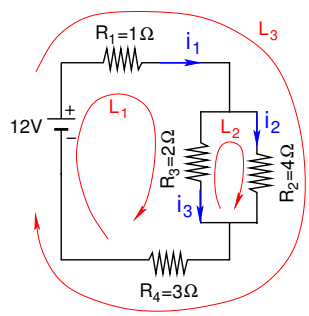


(C2)

**Eg:** In (C2), $L_1$ and $L_2$ are independent because the edge where $R_2$ is located is not shared between the two. If we take $L_1$ and $L_2$ as existing loops, then $L_3$ cannot be independent because every one of its edges is shared either with $L_1$ or $L_2$.

Therefore, only two out of the three currents $i_1,\ i_2,\ i_3$ are independent. In fact, $i_3 = i_1 - i_2$. Thus, if $i_1,\ i_2$ are solved, $i_3$ will be known as a result.

**Conclusion:** The number of independent loops in a closed resistor circuit is equal to the number of unknowns in the system. It is also the number of LI equations that one can write down for the circuit.

### 3.5.3 Solving a resistor network

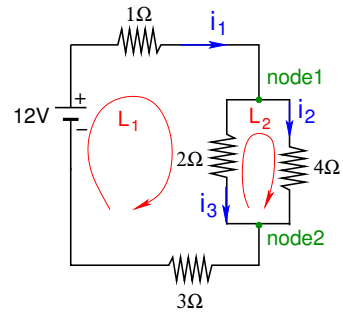


**Eg 3.5.1** Given the circuit, find $i_1,\ i_2,\ i_3$.

**Ans:** The classical solution is based on two physical laws.

**Kirchhoff's 1st/current law:** At each node, the total current is conserved. Or the sum of all currents flowing in is equal to the sum of all currents flowing out.

At node 1: $i_1 - i_2 - i_3 = 0 \qquad \Rightarrow \qquad i_3 = i_1 - i_2.$

At node 2: $i_2 + i_3 - i_1 = 0 \qquad \Rightarrow \qquad i_3 = i_1 - i_2.$

**Kirchhoff's 2nd/voltage law:** In each closed loop, the total voltage drop is zero.

In loop 1: $1i_1 + 2i_3 + 3i_1 - 12 = 0 \xrightarrow{i_3 = i_1 - i_2} 6i_1 - 2i_2 = 12.$

In loop 2: $4i_2 - 2i_3 = 0 \xrightarrow{i_3 = i_1 - i_2} -2i_1 + 62i_2 = 0.$

$$\Rightarrow \qquad \begin{cases} 6i_1 - 2i_2 = 12, \\ -2i_1 + 62i_2 = 0. \end{cases}$$

Now, one uses GE on the augmented matrix to solve it.

$$[A|\vec{b}] = \left[\begin{array}{cc|c} 6 & -2 & 12 \\ -2 & 6 & 0 \end{array}\right] \xrightarrow[(2)=(2)/2]{(1)=(1)/6} \left[\begin{array}{cc|c} 1 & -\frac{1}{3} & 2 \\ -1 & 3 & 0 \end{array}\right]$$

$$\xrightarrow[REF]{(2)=(2)+(1)} \left[\begin{array}{cc|c} 1 & -\frac{1}{3} & 2 \\ 0 & \frac{8}{3} & 2 \end{array}\right] \xrightarrow[\text{substitution}]{\text{Back}} \left[\begin{array}{c} i_1 = \frac{9}{4} \\ i_2 = \frac{3}{4} \end{array}\right].$$

- Now, $i_3 = i_1 - i_2 = \frac{6}{4}$.
- Voltage across each resistor can be calculated based on Ohm's law. E.g. the voltage drop between node 1 and node 2 is equal to $2i_3 = 4i_2 = \frac{12}{4} = 3\ V$.
- Therefore, with two independent loops, we simply need to solve a system of two equations. (Actually, there exist only two LI equations in this circuit.) Every other unknown can be calculated once the two independent unknowns are solved.

**A simplified approach: The Loop Only Method.** The classical solution described above can be further simplified by just writing down voltage drop equations in each loop without having to use Kirchhoff's 1st law on the nodes. Let's demonstrate it using an example.

**Eg 3.5.2** Solve the following resistor network with a current source and two voltage sources.

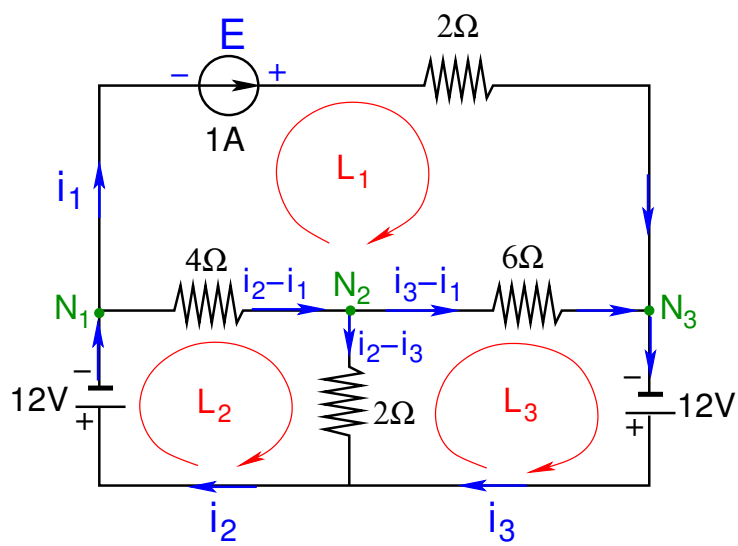


**Current source:** A source that provides a stable current flow in the edge of the circuit where the source is located. However, the voltage drop across a current source, $E$, is now an unknown as well as its direction.

Thus, in the circuit above, $i_1 = 1\ A$ but $E$ is unknown. Every quantity marked with blue colour is unknown.

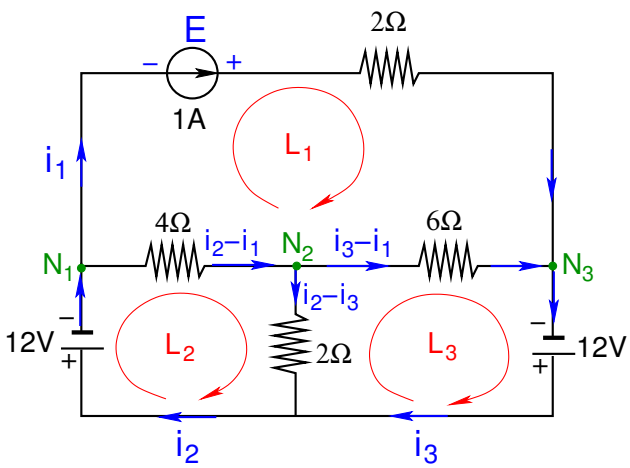


**Step 1:** Identify and label the independent loops. Pre-select a designated direction of current flow in each loop, typically in clockwise direction. If the current turn out to be negative, then the actual direction should be opposite to the marked blue arrow.

**Step 2:** Label the unknown current in each independent edge of each loop with the number of that loop, e.g. in loop 3, that current would be $i_3$.

**Step 3:** Label the current in each shared edge between two loops as follows: pre-select a direction of that current. Then, contribution from the loop in the same direction is "positive", the one that is opposite to it would be "negative".

For example, the edge between loop 1 and loop 2, the current is $i_2 - i_1$. This approach guarantees that Kirchhoff's

1st law is preserved at each node.

Now, we can write down the loop equations.

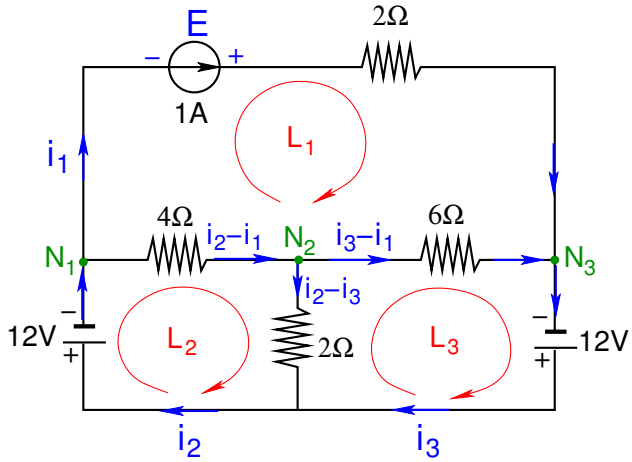


$$
\begin{aligned}
L_1\colon &\quad 2-6(i_3-1)-4(i_2-1)-E=0 \longrightarrow 4i_2+6i_3+E=12.\\
L_2\colon &\quad 4(i_2-1)+2(i_2-i_3)+12=0 \longrightarrow 6i_2-2i_3=-8.\\
L_3\colon &\quad -2(i_2-i_3)+6(i_3-1)-12=0 \longrightarrow 2i_2-8i_3=-18.
\end{aligned}
$$

$$
\Rightarrow \quad \begin{cases} 4i_2+6i_3+E=12, \\ 6i_2-2i_3=-8, \\ 2i_2-8i_3=-18. \end{cases} \quad \Rightarrow \quad [A|\vec{b}] = \left[\begin{array}{ccc|c} 4 & 6 & 1 & 12 \\ 6 & -2 & 0 & -8 \\ 2 & -8 & 0 & -18 \end{array}\right]
$$

$$
\xrightarrow[(1)\leftrightarrow(3)]{(3)=(3)/2} \left[\begin{array}{ccc|c} 1 & -4 & 0 & -9 \\ 6 & -2 & 0 & -8 \\ 4 & 6 & 1 & 12 \end{array}\right] \xrightarrow[(3)=(3)-4(1)]{(2)=(2)-6(1)} \left[\begin{array}{ccc|c} 1 & -4 & 0 & -9 \\ 0 & 22 & 0 & 46 \\ 0 & 22 & 1 & 48 \end{array}\right]
$$

$$
\xrightarrow[\text{REF}]{(3)=(3)-(2)} \left[\begin{array}{ccc|c} 1 & -4 & 0 & -9 \\ 0 & 22 & 0 & 46 \\ 0 & 0 & 1 & 2 \end{array}\right] \xrightarrow[\text{substitution}]{\text{Back}} \left[\begin{array}{c} i_2=-\frac{7}{11} \\ i_3=\frac{23}{11} \\ E=2 \end{array}\right].
$$

**Eg 3.5.3:** Solve the resistor network.

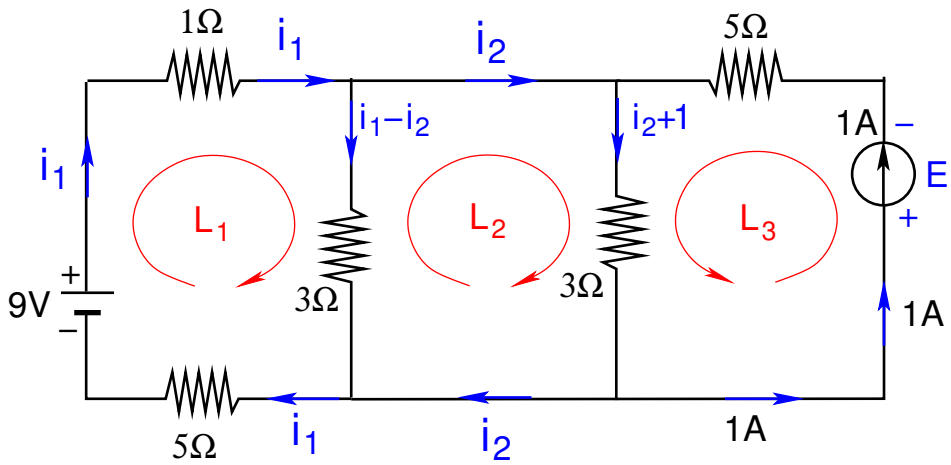


**Ans:**

$$L_1: \quad i_1 + 3(i_1 - i_2) + 5i_1 - 9 = 0 \longrightarrow 9i_1 - 3i_2 = 9.$$

$$L_2: \quad 3(i_2 + 1) - 3(i_1 - i_2) = 0 \longrightarrow 3i_1 - 6i_2 = 3.$$

$$L_3: \quad 5 + 3(i_2 + 1) + E = 0 \longrightarrow 3i_2 + E = -8.$$

$$\Rightarrow \begin{cases} 9i_1 - 3i_2 = 9, \\ 3i_1 - 6i_2 = 3, \\ 3i_2 + E = -8. \end{cases} \Rightarrow [A|\vec{b}] = \left[\begin{array}{ccc|c} 9 & -3 & 0 & 9 \\ 3 & -6 & 0 & 3 \\ 0 & 3 & 1 & -8 \end{array}\right]$$

$$\xrightarrow[(2)=(2)/3]{(1)=(1)/3} \left[\begin{array}{ccc|c} 3 & -1 & 0 & 3 \\ 1 & -2 & 0 & 1 \\ 0 & 3 & 1 & -8 \end{array}\right] \xrightarrow{(1)\leftrightarrow(2)} \left[\begin{array}{ccc|c} 1 & -2 & 0 & 1 \\ 3 & -1 & 0 & 3 \\ 0 & 3 & 1 & -8 \end{array}\right]$$

$$\xrightarrow[(2)=(2)/5]{(2)=(2)-3(1)} \left[\begin{array}{ccc|c} 1 & -2 & 0 & 1 \\ 0 & 1 & 0 & 0 \\ 0 & 3 & 1 & -8 \end{array}\right] \xrightarrow[\text{REF}]{(3)=(3)-3(2)} \left[\begin{array}{ccc|c} 1 & -2 & 0 & 1 \\ 0 & 1 & 0 & 0 \\ 0 & 0 & 1 & -8 \end{array}\right]$$

$$\xrightarrow[\text{substitution}]{\text{Back}} \left[\begin{array}{c} i_1 = 1 \\ i_2 = 0 \\ E = -8 \end{array}\right].$$

**Eg 3.5.4:** Solve the resistor network.

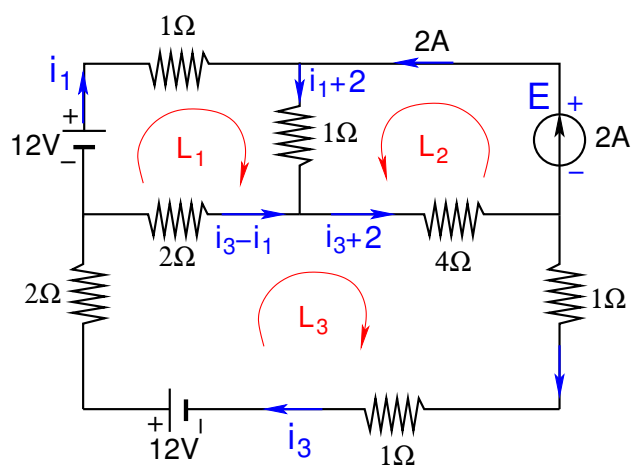


**Ans:**

$L_1$: $\quad i_1 + (i_1 + 2) - 2(i_3 - i_1) - 12 = 0 \;\rightarrow\; 4i_1 - 2i_3 = 10.$

$L_2$: $\quad (i_1+2)+4(i_3+2)-E = 0 \quad\rightarrow\quad i_1+4i_3-E = -10.$

$L_3$: $\quad 2(i_3-i_1)+4(i_3+2)+4i_3-12 = 0 \;\rightarrow\; -2i_1+10i_3 = 4.$

$$\Rightarrow \begin{cases} 4i_1 - 2i_3 = 10, \\ i_1 + 4i_3 - E = -10, \\ -2i_1 + 10i_3 = 4. \end{cases} \Rightarrow [A|\vec{b}] = \left[\begin{array}{ccc|c} 4 & -2 & 0 & 10 \\ 1 & 4 & -1 & -10 \\ -2 & 10 & 0 & 4 \end{array}\right]$$

$$\xrightarrow[(3)=(3)/(-2)]{(1)=(1)/2} \left[\begin{array}{ccc|c} 2 & -1 & 0 & 5 \\ 1 & 4 & -1 & -10 \\ 1 & -5 & 0 & -2 \end{array}\right] \xrightarrow[(3)\to(1)]{(1)\to(2)\to(3)} \left[\begin{array}{ccc|c} 1 & -5 & 0 & -2 \\ 2 & -1 & 0 & 5 \\ 1 & 4 & -1 & -10 \end{array}\right]$$

$$\xrightarrow[(3)=(3)-(1)]{(2)=(2)-2(1)} \left[\begin{array}{ccc|c} 1 & -5 & 0 & -2 \\ 0 & 9 & 0 & 9 \\ 0 & 9 & -1 & -8 \end{array}\right] \xrightarrow[(2)=(2)/9]{(3)=(3)-(2)} \left[\begin{array}{ccc|c} 1 & -5 & 0 & -2 \\ 0 & 1 & 0 & 1 \\ 0 & 0 & -1 & -17 \end{array}\right]$$

$$\xrightarrow[\text{substitution}]{\text{Back}} \begin{bmatrix} i_1 = 3 \\ i_3 = 1 \\ E = 17 \end{bmatrix}.$$

## 3.6 Other applications of linear system

Applications of linear system cover a wide variety of areas including science, engineering, computer, software, sociology, economics, art, ...

**Eg 3.6.1:** Find the appropriate integers $\{x_1,\ x_2,\ x_3,\ x_4\}$ that balance the following chemical reaction.

$$\mathrm{x_1C_6H_{12}O_6 + x_2O_2 \ \Rightarrow\ x_3CO_2 + x_4H_2O + energy.}$$

Let's balance each element between the two sides.

$$C: \quad 6x_1 = x_3 \quad \rightarrow \quad 6x_1 \quad - x_3 \quad = 0;$$

$$H: \quad 12x_1 = 2x_4 \quad \rightarrow \quad 12x_1 \quad - 2x_4 = 0;$$

$$O: \quad 6x_1+2x_2 = 2x_3+x_4 \quad \rightarrow \quad 6x_1+2x_2-2x_3-x_4 = 0.$$

$$\Rightarrow \begin{cases} 6x_1 \quad - x_3 \quad = 0, \\ 12x_1 \quad - 2x_4 = 0, \\ 6x_1 + 2x_2 - 2x_3 - x_4 = 0. \end{cases} \Rightarrow [A] = \begin{bmatrix} 6 & 0 & -1 & 0 \\ 12 & 0 & 0 & -2 \\ 6 & 2 & -2 & -1 \end{bmatrix}$$

$$\xrightarrow[(3)=(3)-(1)]{(2)=(2)-2(1)} \begin{bmatrix} 6 & 0 & -1 & 0 \\ 0 & 0 & 2 & -2 \\ 0 & 2 & -1 & -1 \end{bmatrix} \xrightarrow[(2)\leftrightarrow(3)]{(2)=(2)/2} \begin{bmatrix} 6 & 0 & -1 & 0 \\ 0 & 2 & -1 & -1 \\ 0 & 0 & 1 & -1 \end{bmatrix}$$

$$\xrightarrow[\text{substitution}]{x_4=t,\ \text{Back}} \begin{bmatrix} x_1 = \frac{t}{6} \\ x_2 = t \\ x_3 = t \\ x_4 = t \end{bmatrix} \quad \Rightarrow \quad \vec{x} = \begin{bmatrix} x_1 \\ x_2 \\ x_3 \\ x_4 \end{bmatrix} = t \begin{bmatrix} \frac{1}{6} \\ 1 \\ 1 \\ 1 \end{bmatrix}.$$

Let $t = 6$, then $x_1 = 1$, $x_2 = x_3 = x_4 = 6$. Thus, the balanced chemical reaction yields

$$\mathrm{C_6H_{12}O_6} + 6\mathrm{O_2} \ \Rightarrow\ 6\mathrm{CO_2} + 6\mathrm{H_2O} + \text{energy}.$$

**Eg 3.6.2:** Traffic at four nodes of a city block are measured yielding the numbers given in the graph. All streets allow only one-way traffic as indicated. Determine the traffic flows $\{x_1,\ x_2,\ x_3,\ x_4\}$ in the four streets involved.

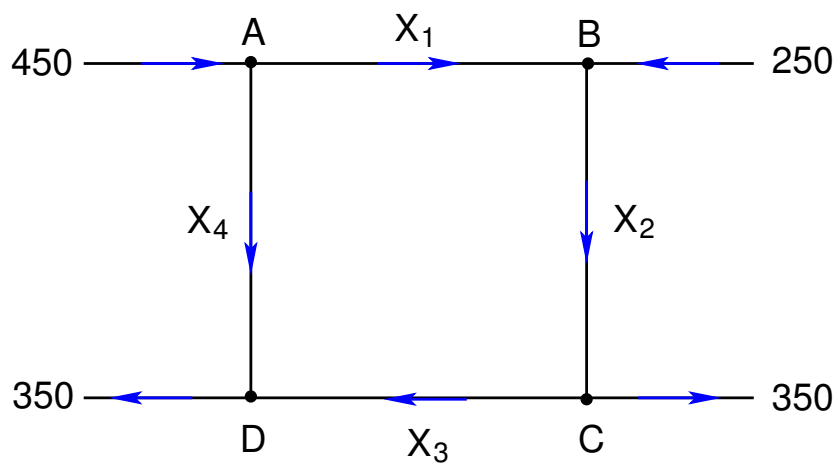


**Ans:**

Table 1: Traffic flow at each node.

| Node | $F_{in}$ | $F_{out}$ | Equation: $F_{in}$=$F_{out}$ |
|---|---|---|---|
| A | 450 | $x_1 + x_4$ | $x_1 + x_4 = 450$ |
| B | $x_1 + 250$ | $x_2$ | $-x_1 + x_2 = 250$ |
| C | $x_2$ | $x_3 + 350$ | $x_2 - x_3 = 350$ |
| D | $x_3 + x_4$ | 350 | $x_3 + x_4 = 350$ |

$$\Rightarrow \begin{cases} x_1 \qquad\qquad\qquad + x_4 = 450, \\ -x_1 + x_2 \qquad\qquad\quad = 250, \\ \qquad\quad x_2 + x_3 \qquad\quad = 350, \\ \qquad\qquad\quad x_3 + x_4 = 350. \end{cases} \Rightarrow \left[\begin{array}{cccc|c} 1 & 0 & 0 & 1 & 450 \\ -1 & 1 & 0 & 0 & 250 \\ 0 & 1 & -1 & 0 & 350 \\ 0 & 0 & 1 & 1 & 350 \end{array}\right]$$

$$\xrightarrow[(3)=(3)-(2)']{(2)=(2)+(1)} \left[\begin{array}{cccc|c} 1 & 0 & 0 & 1 & +450 \\ 0 & 1 & 0 & 1 & +700 \\ 0 & 0 & -1 & -1 & -350 \\ 0 & 0 & 1 & 1 & +350 \end{array}\right] \xrightarrow[(3)-(2)']{(2)=-(2)} \left[\begin{array}{cccc|c} 1 & 0 & 0 & 1 & 450 \\ 0 & 1 & 0 & 1 & 700 \\ 0 & 0 & 1 & 1 & 350 \\ 0 & 0 & 0 & 0 & 0 \end{array}\right]$$

$$\xrightarrow[\text{substitution}]{x_4=t,\ \text{Back}} \left[\begin{array}{l} x_1 = 450 - t \\ x_2 = 700 - t \\ x_3 = 350 - t \\ x_4 = t \end{array}\right] \Rightarrow \vec{x}(t) = t \begin{bmatrix} -1 \\ -1 \\ -1 \\ 1 \end{bmatrix} + \begin{bmatrix} 450 \\ 700 \\ 350 \\ 0 \end{bmatrix}.$$

It is obvious that $0 \leq t \leq 350$. Therefore,

$$\vec{x}(0) = \begin{bmatrix} 450 \\ 700 \\ 350 \\ 0 \end{bmatrix} \quad \geq \quad \vec{x}(t) \quad \geq \quad \vec{x}(350) = \begin{bmatrix} 100 \\ 350 \\ 0 \\ 350 \end{bmatrix}.$$

**Eg 3.6.3:** Economy of coal, electricity, steel industries. Let $P_c,\ P_e,\ P_s$ be prices (in \$) of total annual OUTPUT of the coal, electricity, steel sectors respectively. At equilibrium,

$$\text{Output} \ = \ \text{Expanses}, \qquad \text{for each sector.}$$

The percentage of the output of each sector purchased by other sectors are summarized as follows. Find the relative output of each sector.

Table 2: Purchase ratios of different sectors.

| Purchased by | Output from | | |
|---|---|---|---|
| | Coal | Electricity | Steel |
| Coal | 0 | 0.4 | 0.6 |
| Electricity | 0.6 | 0.1 | 0.2 |
| Steel | 0.4 | 0.5 | 0.2 |

$$\begin{cases} P_c = 0P_c + 0.4P_e + 0.6P_s, \\ P_e = 0.6P_c + 0.1P_e + 0.2P_s, \\ P_e = 0.4P_c + 0.5P_e + 0.2P_s, \end{cases} \Rightarrow \begin{cases} P_c - 0.4P_e - 0.6P_s = 0, \\ -0.6P_c + 0.9P_e - 0.2P_s = 0, \\ -0.4P_c - 0.5P_e + 0.8P_s = 0. \end{cases}$$

$$\Rightarrow \begin{bmatrix} 1 & -0.4 & -0.6 \\ -0.6 & 0.9 & -0.2 \\ -0.4 & -0.5 & 0.8 \end{bmatrix} \xrightarrow[(3)=(1)+(2)+(3)]{(2)=(2)+0.6(1)} \begin{bmatrix} 1 & -0.4 & -0.6 \\ 0 & 0.66 & -0.56 \\ 0 & 0 & 0 \end{bmatrix}$$

$$\xrightarrow{(2)=(2)/0.66} \begin{bmatrix} 1 & -0.4 & -0.6 \\ 0 & 1 & -\frac{28}{33} \\ 0 & 0 & 0 \end{bmatrix} \xrightarrow{(1)=(1)+0.4(2)} \begin{bmatrix} 1 & 0 & -\frac{31}{33} \\ 0 & 1 & -\frac{28}{33} \\ 0 & 0 & 0 \end{bmatrix}$$

$$\xrightarrow[\text{substitution}]{P_s=t,\ \text{Back}} \begin{bmatrix} P_c = \frac{31}{33}t \\ P_e = \frac{28}{33}t \\ P_s = t \end{bmatrix} \Rightarrow \begin{bmatrix} P_c \\ P_e \\ P_s \end{bmatrix} = t \begin{bmatrix} \frac{31}{33} \\ \frac{28}{33} \\ 1 \end{bmatrix} \approx t \begin{bmatrix} 0.94 \\ 0.85 \\ 1 \end{bmatrix}.$$