WORKSHOP 1·3

Solutions

Part A

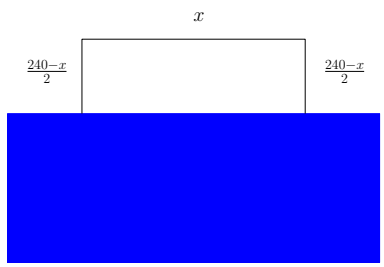

Figure 1: Diagram for the warm-up problem.

There are two ways to solve this problem, whether the side we consider the length is parallel or perpendicular to the river. I added a figure for the former case.
First we set the dimensions of the rectangle as x for the length and y for the height. We know that the area of the rectangle is expressed as

$$A = xy.$$

However we need an expression of x only. We know that the sum of the lengths of the three sides must be 240 m. So we have

$$240 \text{ m} = x + 2y.$$

We are required to find a formula of x only, so we may solve for y:

$$y = \frac{240 \text{ m} - x}{2}.$$

Finally we can substitute back in the area formula to obtain

$$A(x) = \frac{240 \text{ m}x - x^2}{2}.$$

If we assume that the length is perpendicular to the river we obtain $y = 240 \text{ m} - 2x$ and $A(x) = 240 \text{ m}x - 2x^2$.

Part B

First we draw the diagram of our window.
We note that the window has two main dimension: its width x and the height of its rectangle section y. The area is computed by adding the area of the bottom rectangle and that of the half disk on top.

$$A = xy + \frac{\pi r^2}{2}.$$

Once again we need to replace y in that expression as we want a formula involving only x. We use the perimeter of 10 m provided.

$$10 \text{ m} = 2y + x + \frac{\pi x}{2}$$

We can solve for y:

$$y = \frac{10 \text{ m} - \left(1 + \frac{\pi}{2}\right) x}{2}.$$

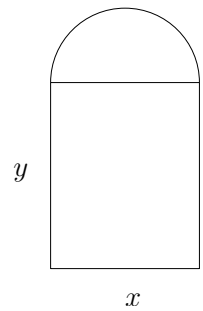

Figure 2: Diagram of a Norman window.

Finally we substitute back into our area formula:

$$A(x) = \frac{10 \text{ m} \cdot x - \left(1 + \frac{\pi}{2}\right)\left(\frac{x}{2}\right)^2}{2}$$

Part C

The first step is to draw the diagram of the poster.

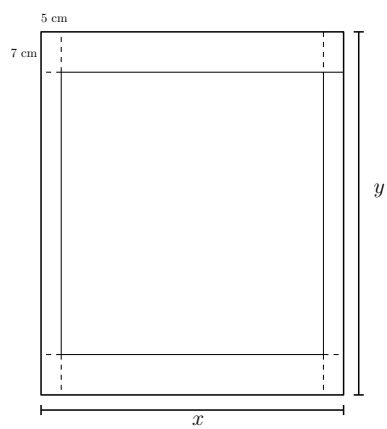

Figure 3: Diagram of the poster.

We define the the total width as x and the total height as y. We know that the total area must be 1000 cm^2:

$$1000 \text{ cm}^2 = xy. \tag{1}$$

We then need to compute the printable area. That is the total area minus the area of each corner and margin rectangles:

$$PA = 1000 \text{ cm}^2 + 4 \cdot 35 \text{ cm}^2 - 2x \cdot 7 \text{ cm} - 2y \cdot 5 \text{ cm}.$$

We add $4 \cdot 35$ cm^2 in the formula because we removed each corner twice. We need to find an expression as a function of one side's length only so we use the total area formula (1) and solve for y:

$$y = \frac{1000 \text{ cm}^2}{x}.$$

Finally we substitute back into our printable area formula:

$$PA(x) = 1000 \text{ cm}^2 + 4 \cdot 35 \text{ cm}^2 - 2x \cdot 7 \text{ cm} - 2\frac{1000 \text{ cm}^2}{x} \cdot 5 \text{ cm}.$$

The domain of our printable formula is the set of all possible widths x that could produce a poster. If we just consider the fact that we need side margins of 5 cm, the minimal width would be 10 cm. For the maximal width We set the height to 14 cm, the minimal height and the width should be $\frac{1000 \text{ cm}^2}{14 \text{ cm}}$. The domain is thus the interval $\left[10 \text{ cm}, \frac{1000 \text{ cm}^2}{14 \text{ cm}}\right]$.

For the bonus question. We first need to find a formula for the output per tree as a function of n. To do this we find the formula of the line that goes through $(50, 350)$ with a slope of -10. We can use the point-slope method to find this:

$$UO = -10(n - 50) + 350.$$

The total out put is simply the output per tree times the total number of trees.

$$TO = -10n(n - 50) + 350n.$$