Outline

Week 5: Circuits

Course Notes: 3.5

Goals: Use linear algebra to determine voltage drops and branch currents.

Components in Resistor Networks

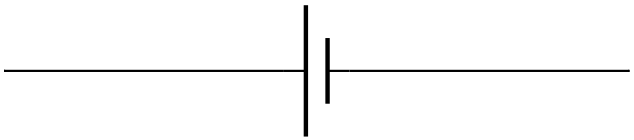

voltage source

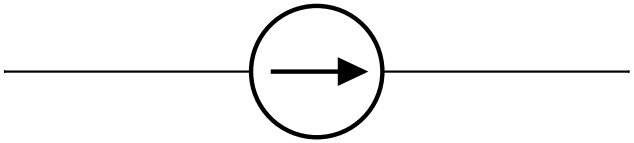

current source

resistor

Components in Resistor Networks

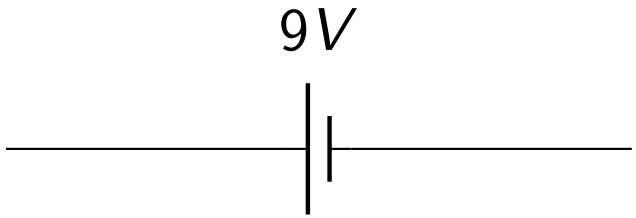

voltage source

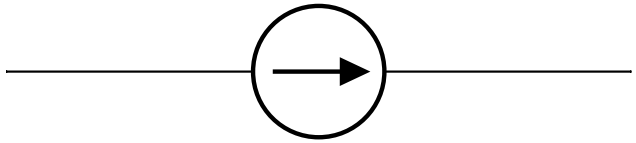

current source

resistor

Components in Resistor Networks

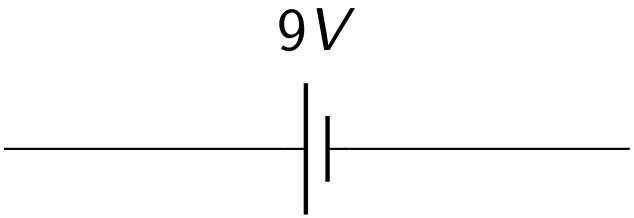

voltage source

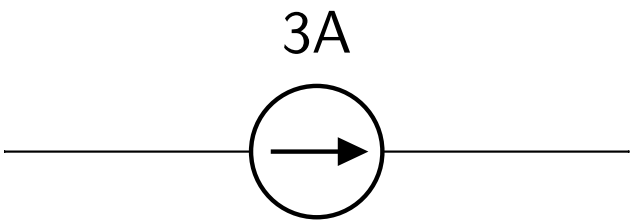

current source (inductor at an instant)

resistor

Components in Resistor Networks

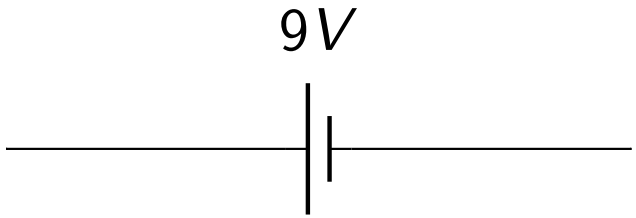

voltage source

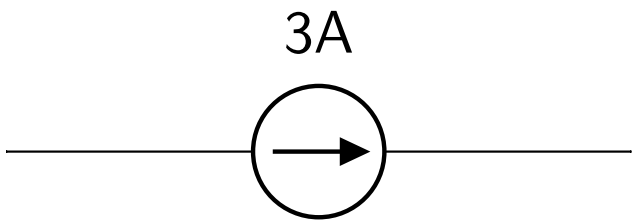

current source (inductor at an instant)

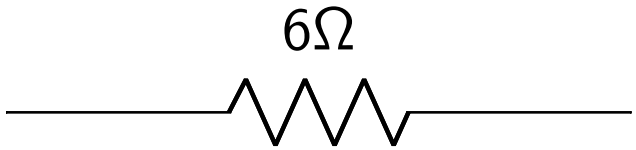

resistor

$V = IR$

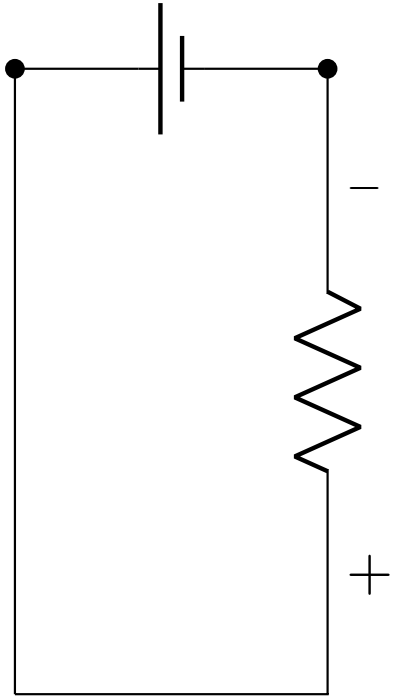

$V = IR$

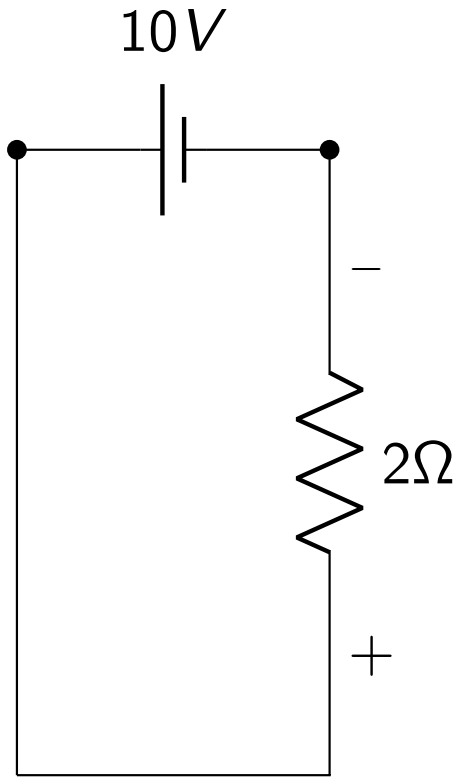

$V = IR$

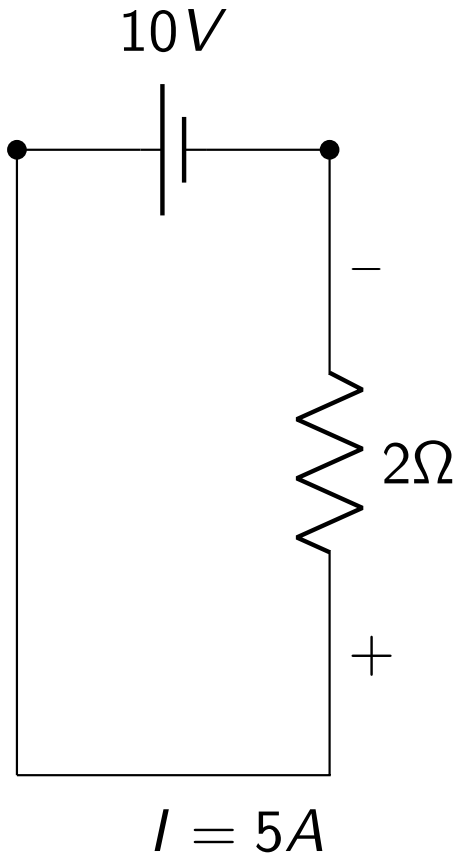

$V = IR$

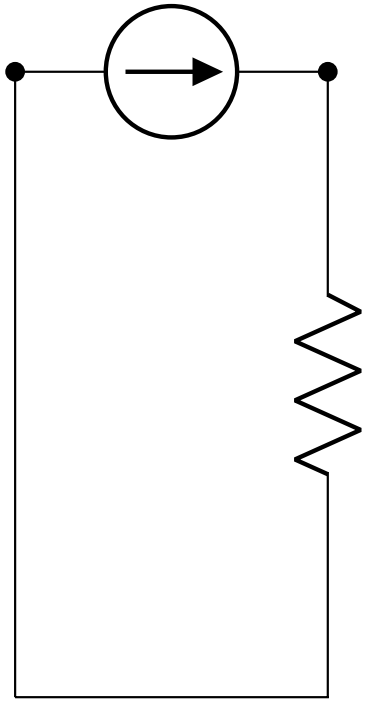

$V = IR$

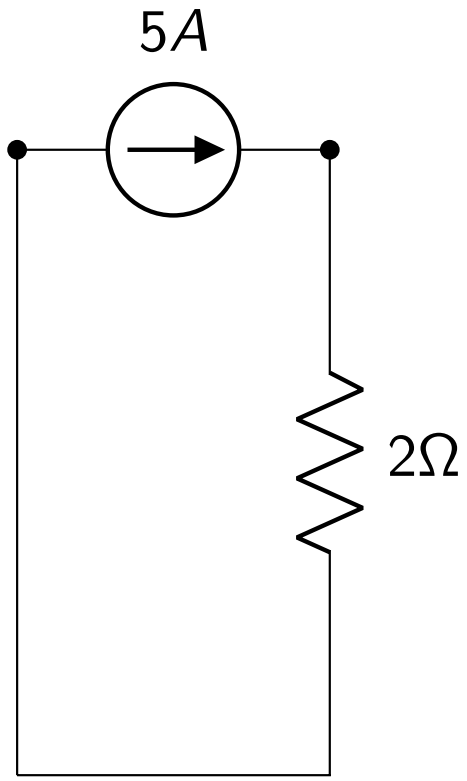

$V = IR$

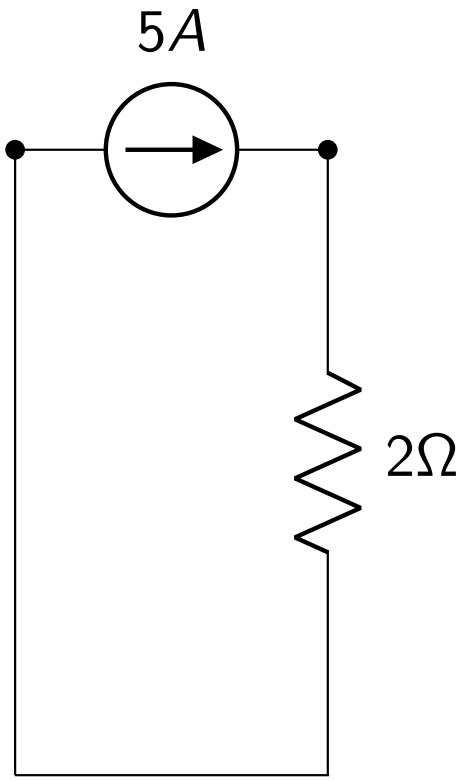

$V = 10$

(voltage drop of 10 Volts across resistor)

$V = IR$

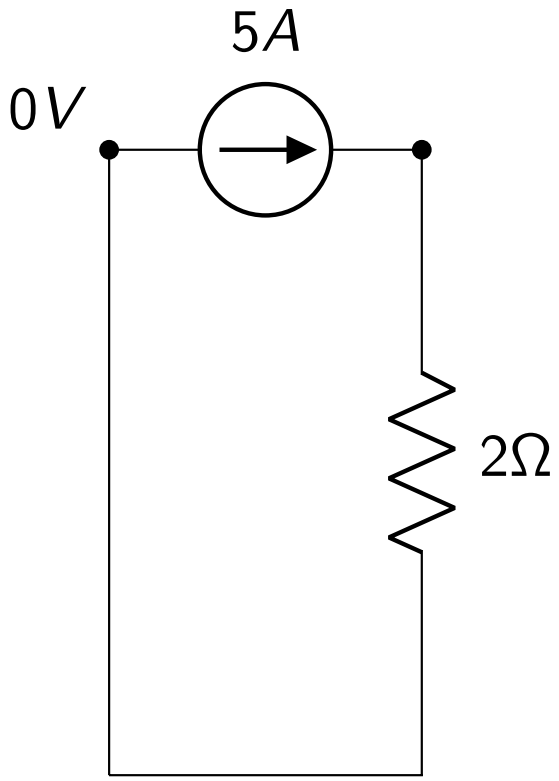

$V = 10$

(voltage drop of 10 Volts across resistor)

$V = IR$

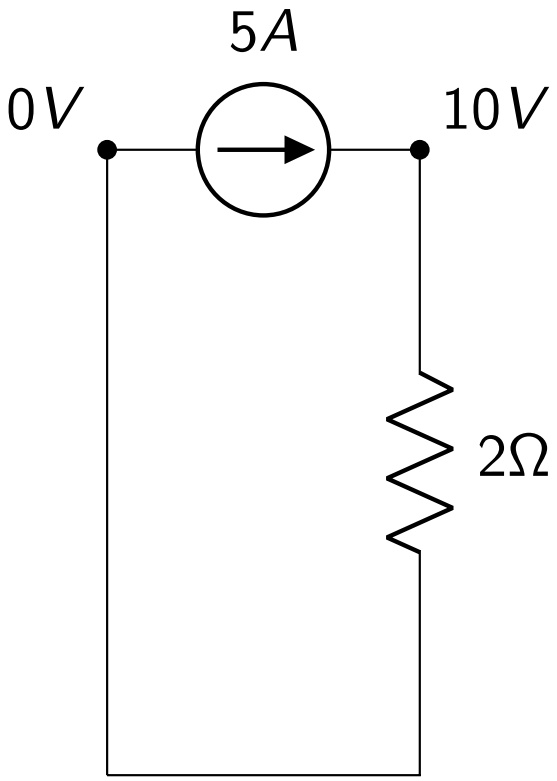

$V = 10$

(voltage drop of 10 Volts across resistor)

$V = IR$

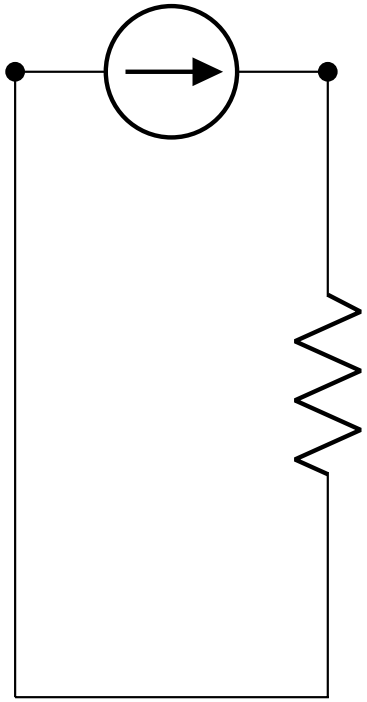

Setup: Given: Resistance of resistors; voltage across voltage sources; current through current sources.

Find: currents through each resistor and each voltage source; voltage drops across each current source

Kirchhoff's Laws

1. The sum of voltage drops around any closed loops in the network must be zero.
2. For any node, current in equals current out

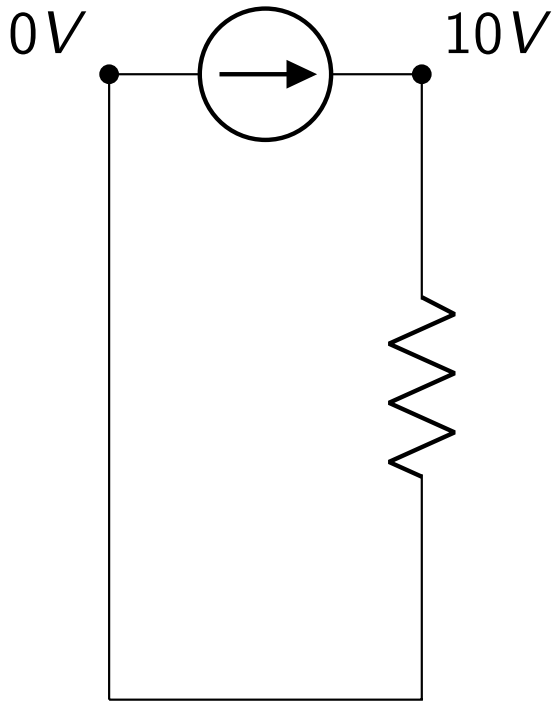

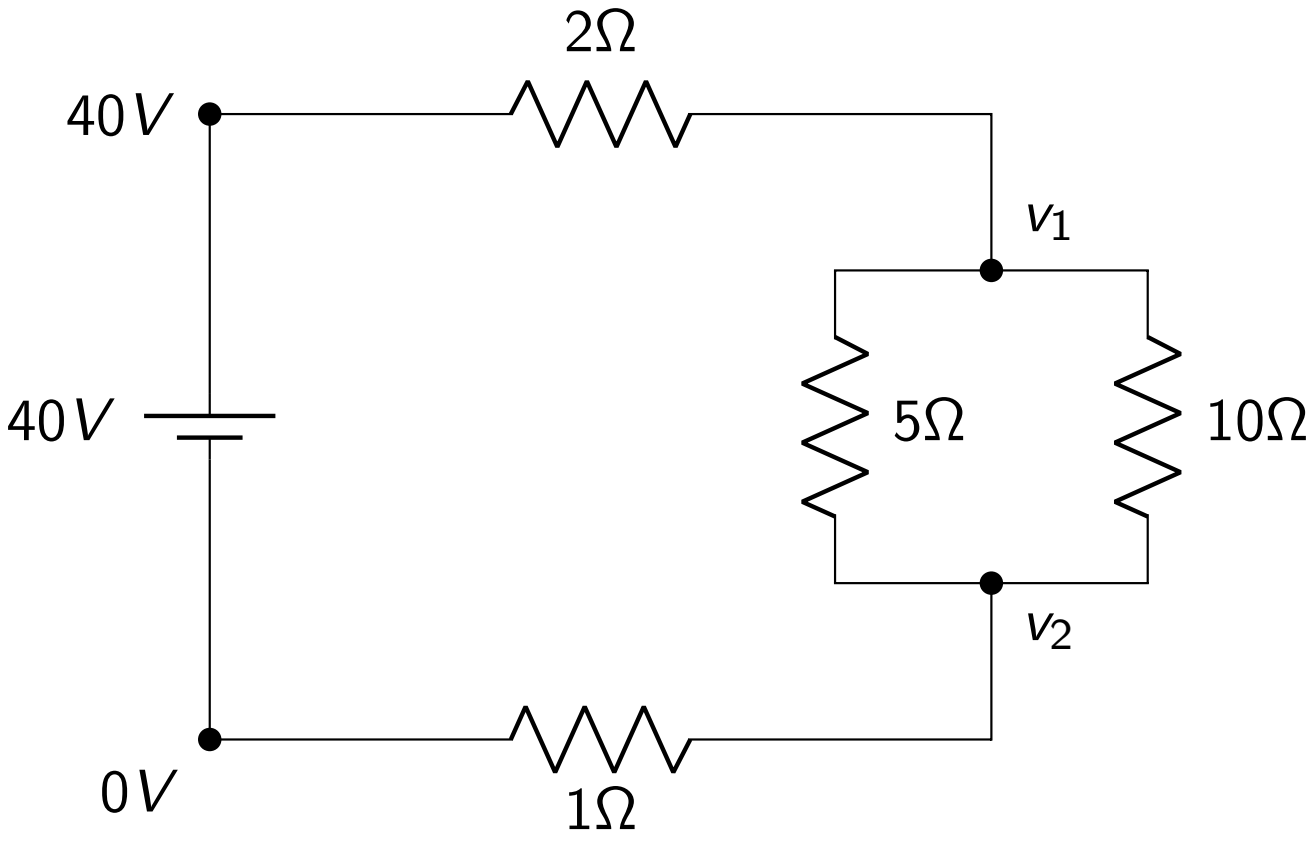
2Ω
40 V
v1
40 V
5Ω
10Ω
v2
0 V
1Ω

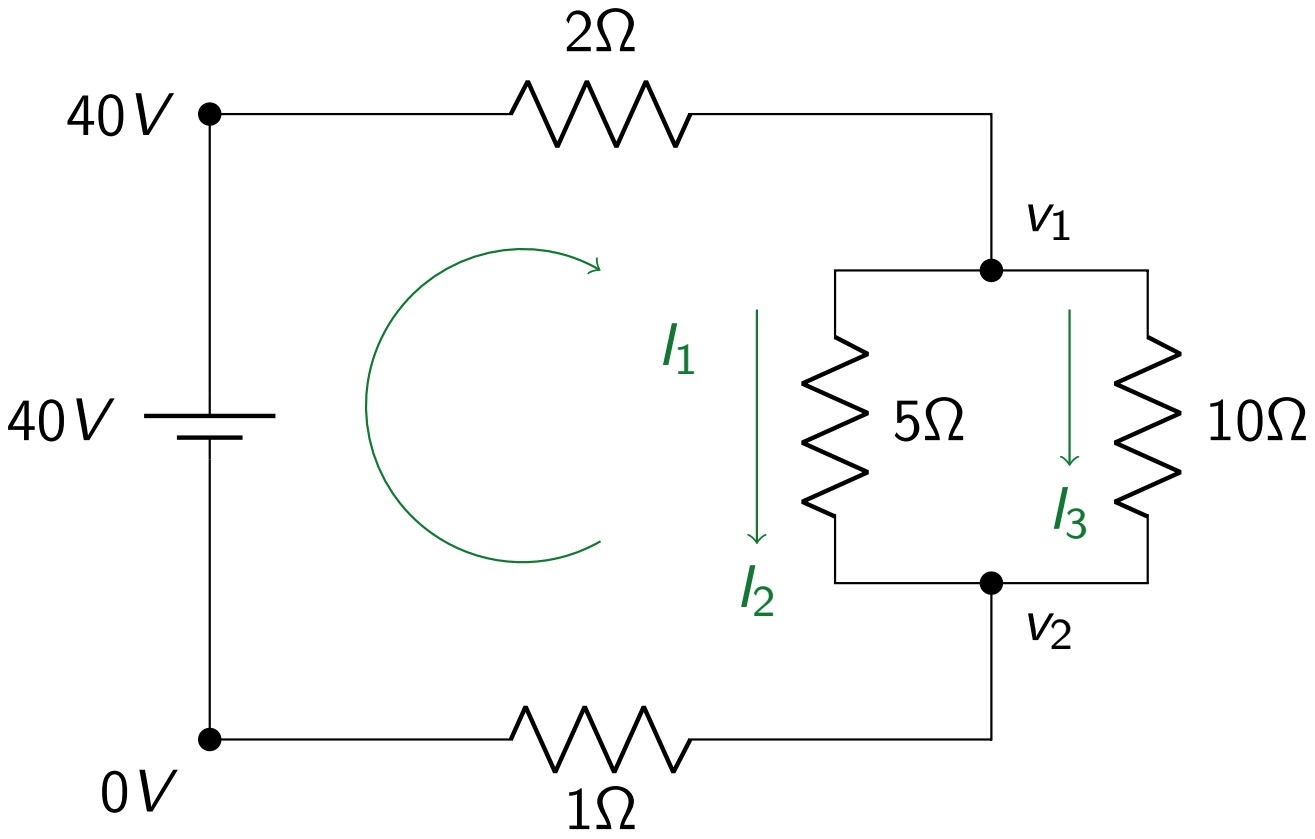
2Ω
40 V
v1
I1
40 V
5Ω
10Ω
I3
I2
v2
0 V
1Ω

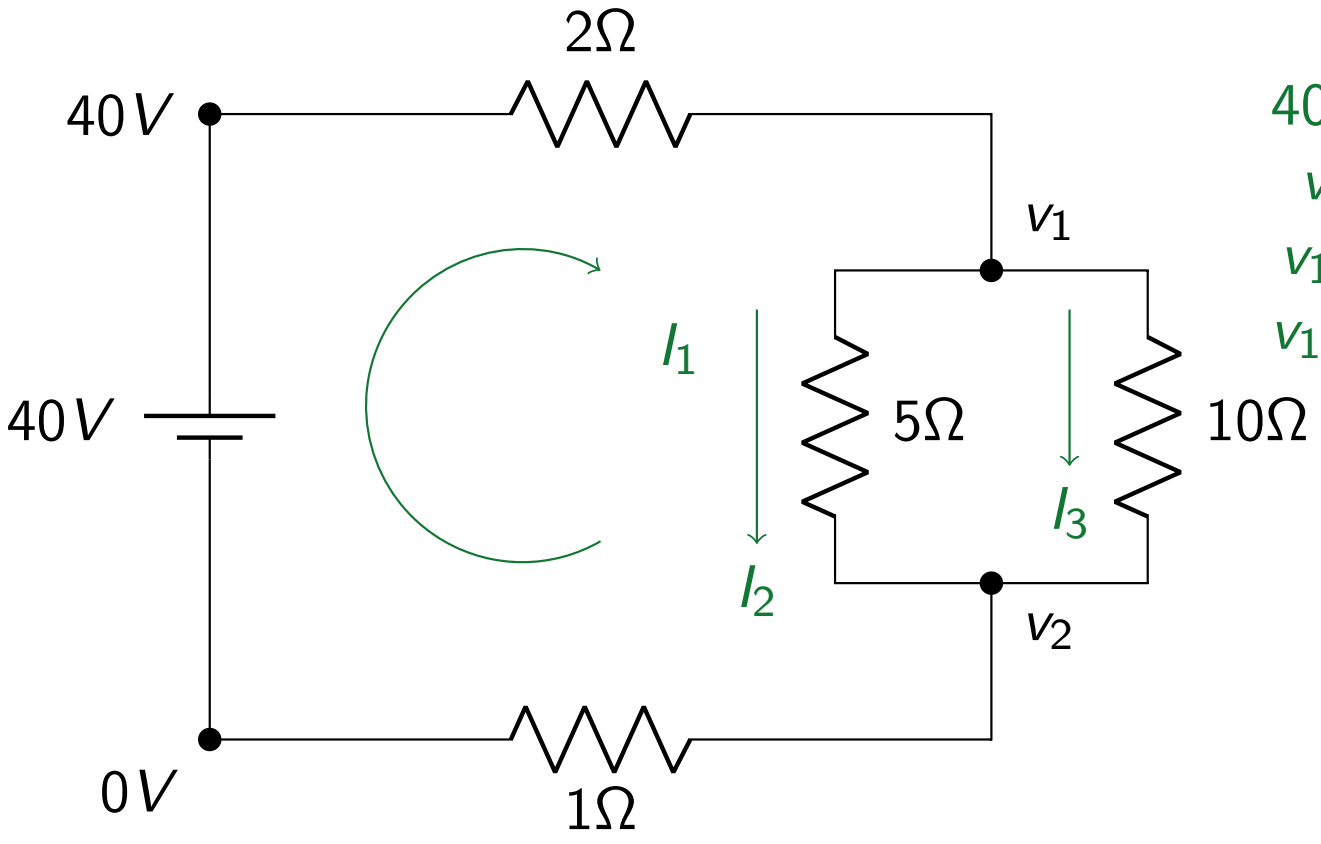

$$I_1 = I_2 + I_3$$
$$40 - v_1 = I_1 \cdot 2$$
$$v_2 - 0 = I_1 \cdot 1$$
$$v_1 - v_2 = 5I_2$$
$$v_1 - v_2 = 10I_3$$

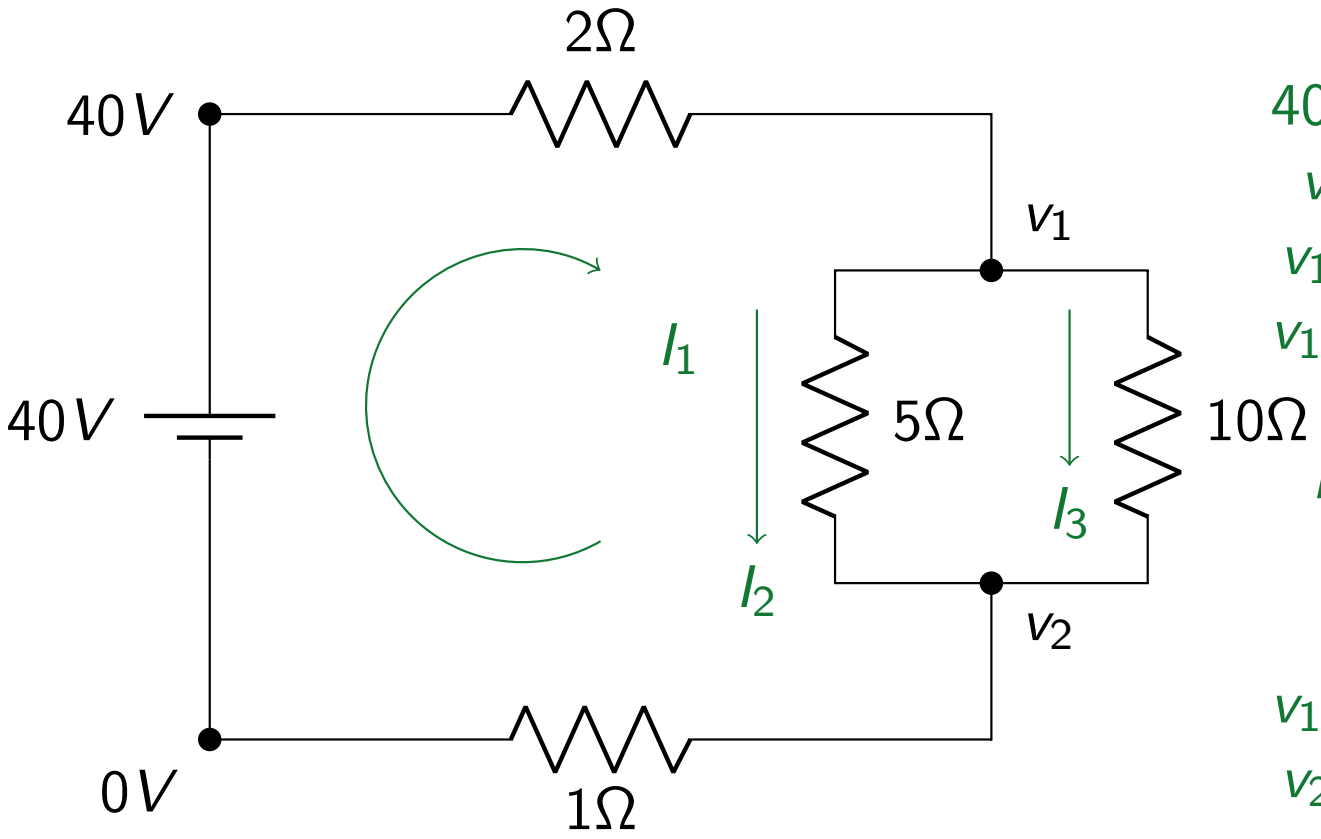

$$I_1 = I_2 + I_3$$
$$40 - v_1 = I_1 \cdot 2$$
$$v_2 - 0 = I_1 \cdot 1$$
$$v_1 - v_2 = 5I_2$$
$$v_1 - v_2 = 10I_3$$

$$I_1 = \frac{120}{19} \approx 6.3$$
$$I_2 = \frac{80}{19} \approx 4.2$$
$$I_3 = \frac{40}{19} \approx 2.1$$
$$v_1 = \frac{520}{19} \approx 27.4$$
$$v_2 = \frac{120}{19} \approx 6.3$$

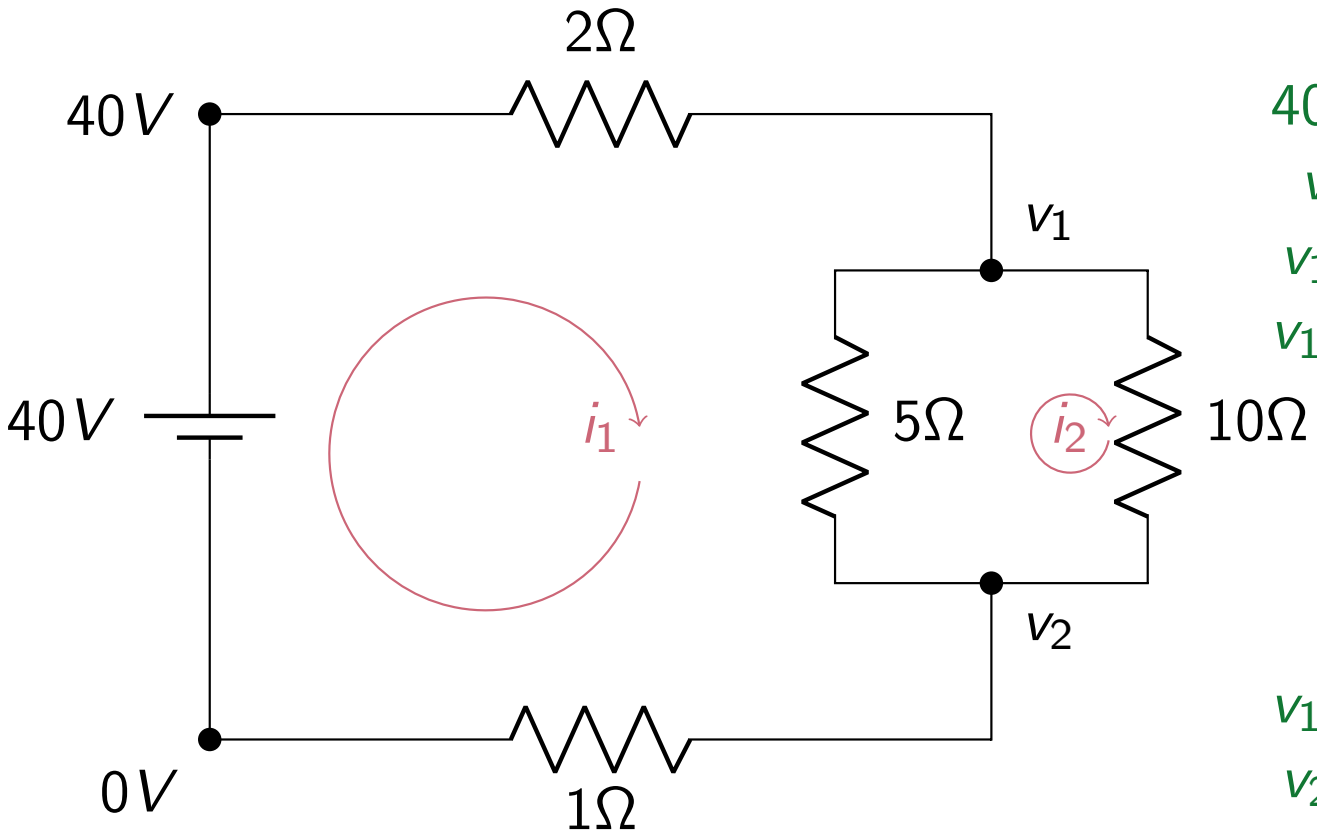

$$I_1 = I_2 + I_3$$
$$40 - v_1 = I_1 \cdot 2$$
$$v_2 - 0 = I_1 \cdot 1$$
$$v_1 - v_2 = 5I_2$$
$$v_1 - v_2 = 10I_3$$

$$I_1 = \frac{120}{19} \approx 6.3$$
$$I_2 = \frac{80}{19} \approx 4.2$$
$$I_3 = \frac{40}{19} \approx 2.1$$
$$v_1 = \frac{520}{19} \approx 27.4$$
$$v_2 = \frac{120}{19} \approx 6.3$$

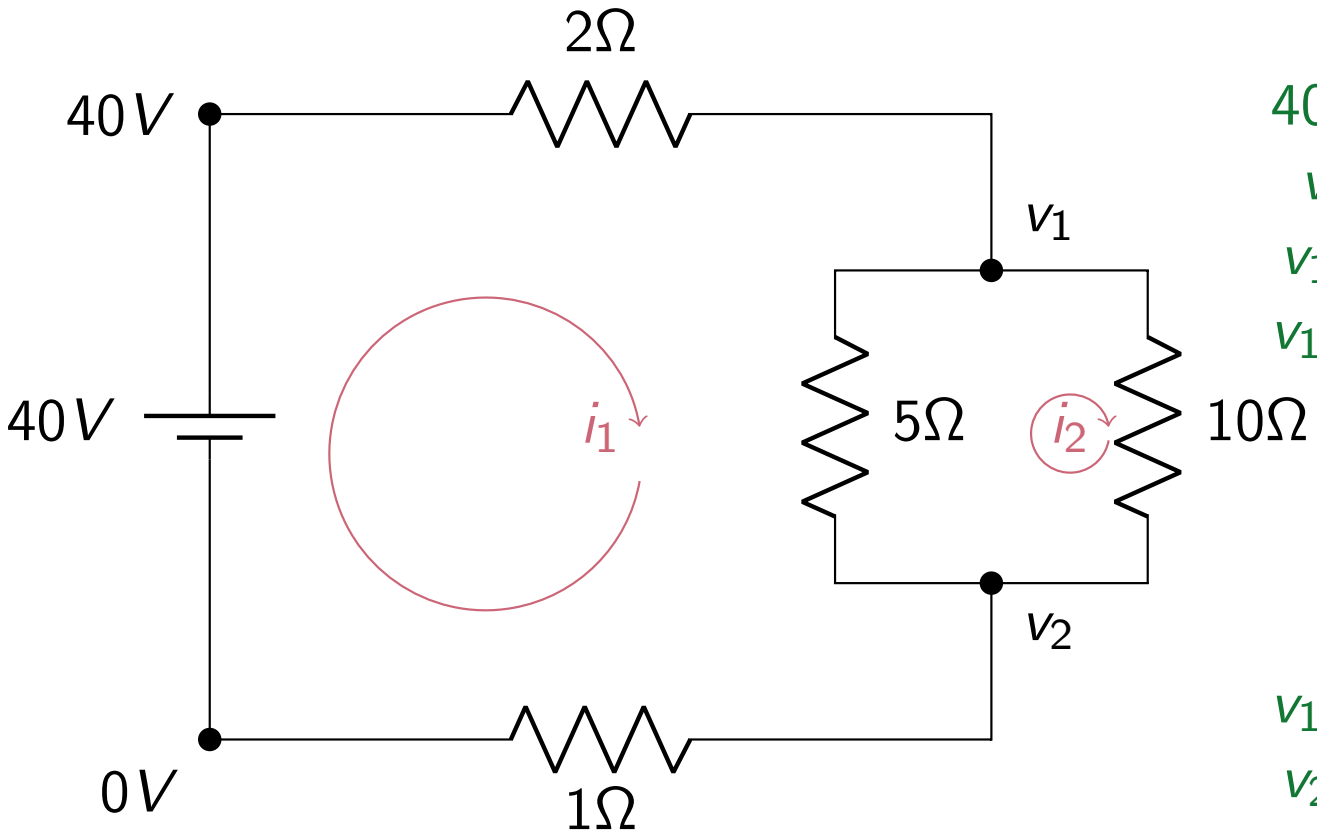

$$I_1 = I_2 + I_3$$
$$40 - v_1 = I_1 \cdot 2$$
$$v_2 - 0 = I_1 \cdot 1$$
$$v_1 - v_2 = 5I_2$$
$$v_1 - v_2 = 10I_3$$

$$I_1 = \frac{120}{19} \approx 6.3$$
$$I_2 = \frac{80}{19} \approx 4.2$$
$$I_3 = \frac{40}{19} \approx 2.1$$
$$v_1 = \frac{520}{19} \approx 27.4$$
$$v_2 = \frac{120}{19} \approx 6.3$$

$$1i_1 - 40 + 2i_1 + 5(i_1 - i_2) = 0$$
$$10i_2 + 5(i_2 - i_1) = 0$$

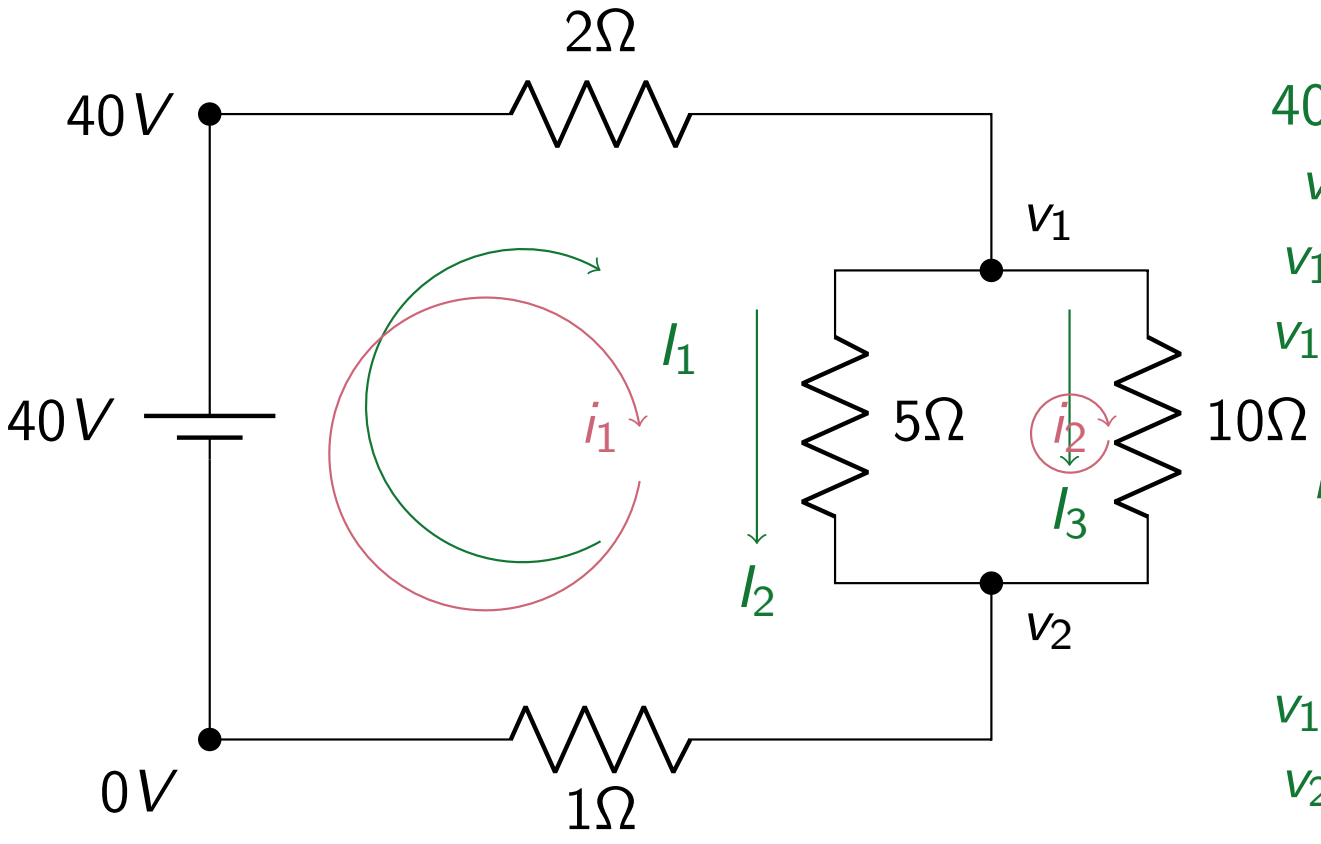

$$I_1 = I_2 + I_3$$
$$40 - v_1 = I_1 \cdot 2$$
$$v_2 - 0 = I_1 \cdot 1$$
$$v_1 - v_2 = 5I_2$$
$$v_1 - v_2 = 10I_3$$

$$I_1 = \frac{120}{19} \approx 6.3$$
$$I_2 = \frac{80}{19} \approx 4.2$$
$$I_3 = \frac{40}{19} \approx 2.1$$
$$v_1 = \frac{520}{19} \approx 27.4$$
$$v_2 = \frac{120}{19} \approx 6.3$$

$$1i_1 - 40 + 2i_1 + 5(i_1 - i_2) = 0$$
$$10i_2 + 5(i_2 - i_1) = 0$$

$$i_1 = \frac{120}{19},\ i_2 = \frac{40}{19}$$

Things to Keep in Mind

- Set up your loop currents in any direction (clockwise or counter-clockwise), then follow them around in that direction.

Things to Keep in Mind

- Set up your loop currents in any direction (clockwise or counter-clockwise), then follow them around in that direction.
- If your actual flow is not in the direction you chose, you'll simply get a negative number for your current

Things to Keep in Mind

- Set up your loop currents in any direction (clockwise or counter-clockwise), then follow them around in that direction.
- If your actual flow is not in the direction you chose, you'll simply get a negative number for your current
- We're counting up voltage drops around a loop. A voltage DROP is high to low.

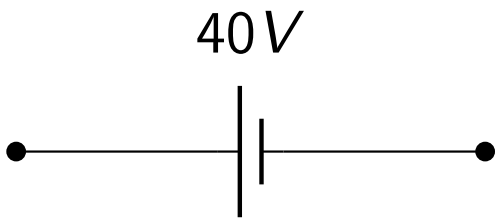

Things to Keep in Mind

- Set up your loop currents in any direction (clockwise or counter-clockwise), then follow them around in that direction.
- If your actual flow is not in the direction you chose, you'll simply get a negative number for your current
- We're counting up voltage drops around a loop. A voltage DROP is high to low.

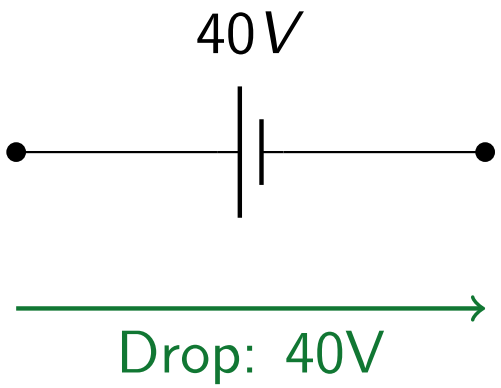

Things to Keep in Mind

- Set up your loop currents in any direction (clockwise or counter-clockwise), then follow them around in that direction.
- If your actual flow is not in the direction you chose, you'll simply get a negative number for your current
- We're counting up voltage drops around a loop. A voltage DROP is high to low.

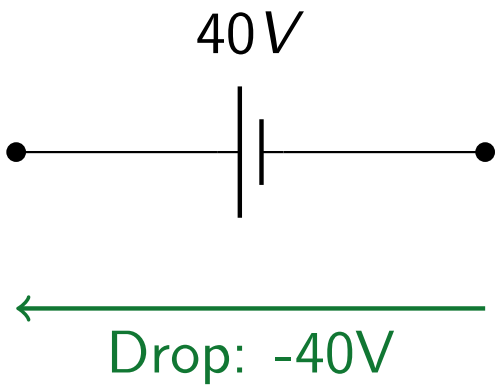

Things to Keep in Mind

- Set up your loop currents in any direction (clockwise or counter-clockwise), then follow them around in that direction.
- If your actual flow is not in the direction you chose, you'll simply get a negative number for your current
- We're counting up voltage drops around a loop. A voltage DROP is high to low.
- Branch current is the NET effect of the loop currents.

Things to Keep in Mind

- Set up your loop currents in any direction (clockwise or counter-clockwise), then follow them around in that direction.

- If your actual flow is not in the direction you chose, you'll simply get a negative number for your current

- We're counting up voltage drops around a loop. A voltage DROP is high to low.

- Branch current is the NET effect of the loop currents.

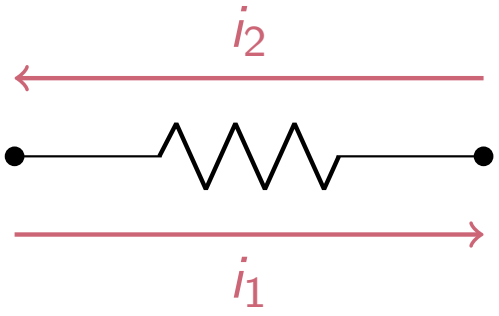

Things to Keep in Mind

- Set up your loop currents in any direction (clockwise or counter-clockwise), then follow them around in that direction.

- If your actual flow is not in the direction you chose, you'll simply get a negative number for your current

- We're counting up voltage drops around a loop. A voltage DROP is high to low.

- Branch current is the NET effect of the loop currents.

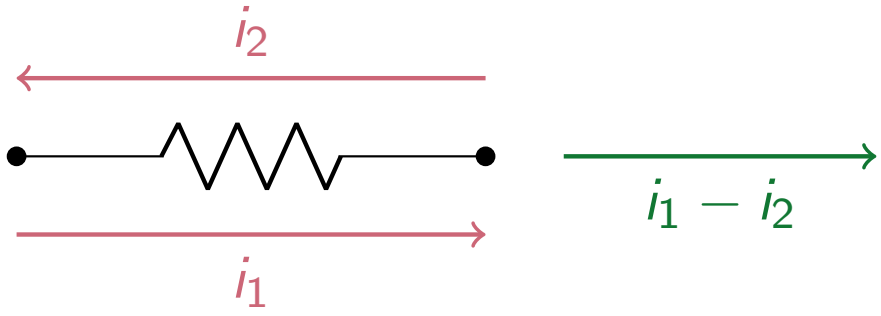

Things to Keep in Mind

- Set up your loop currents in any direction (clockwise or counter-clockwise), then follow them around in that direction.

- If your actual flow is not in the direction you chose, you'll simply get a negative number for your current

- We're counting up voltage drops around a loop. A voltage DROP is high to low.

- Branch current is the NET effect of the loop currents.

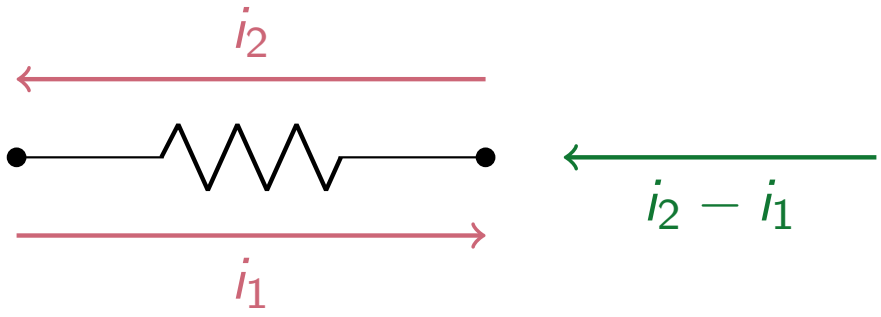

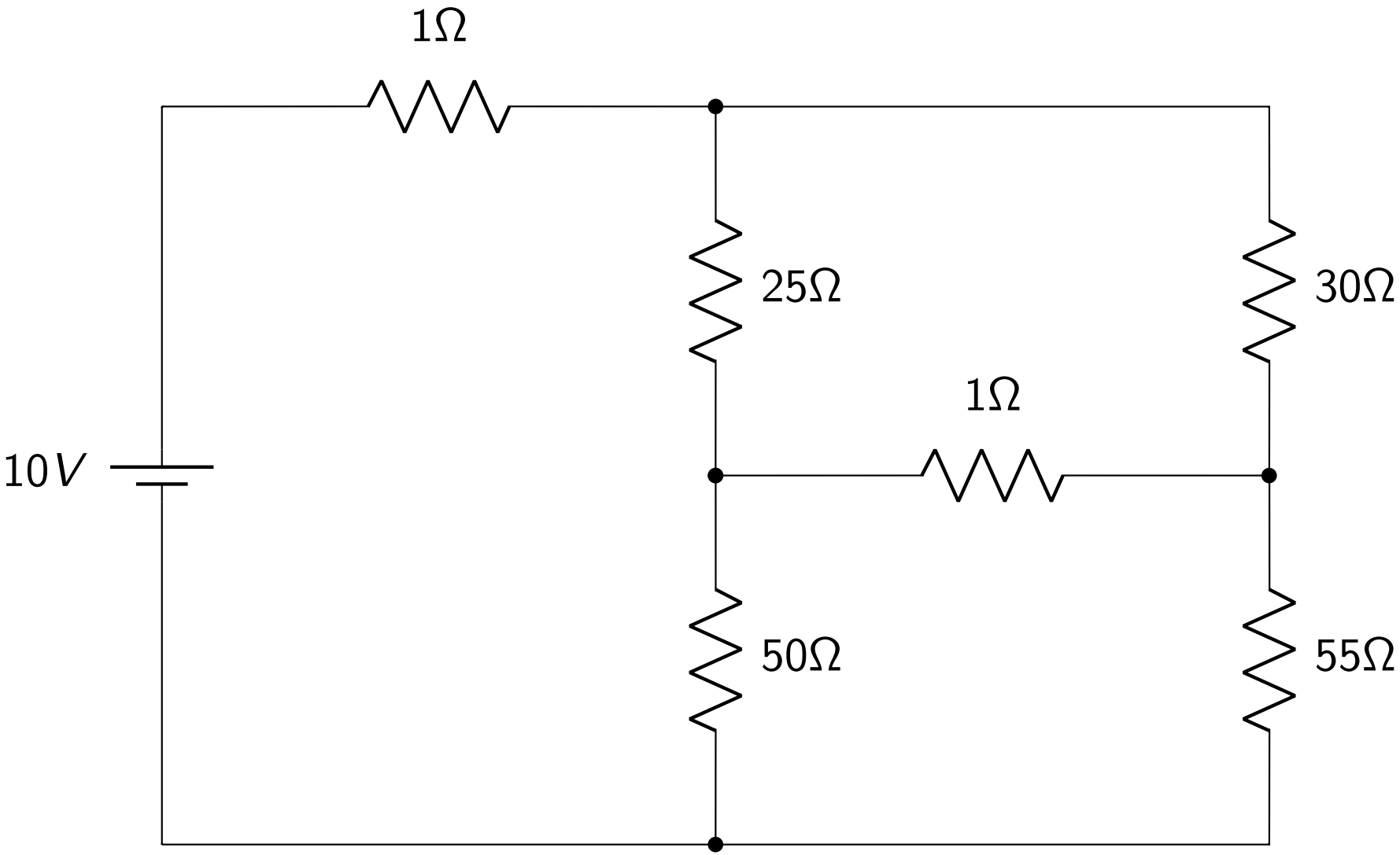
1Ω
25Ω
30Ω
1Ω
10V
50Ω
55Ω

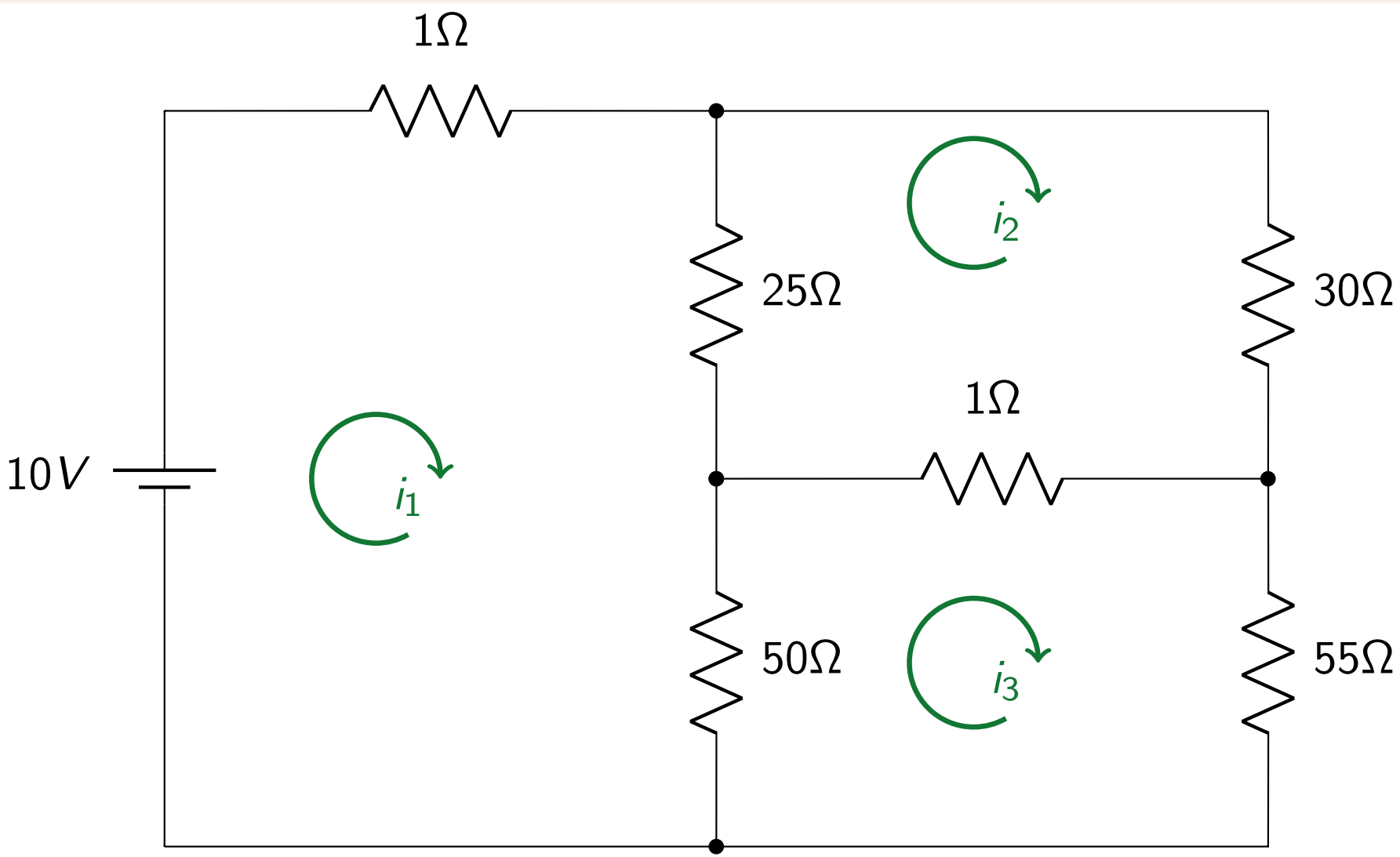
1Ω
25Ω
30Ω
1Ω
10V
50Ω
55Ω
i_1
i_2
i_3

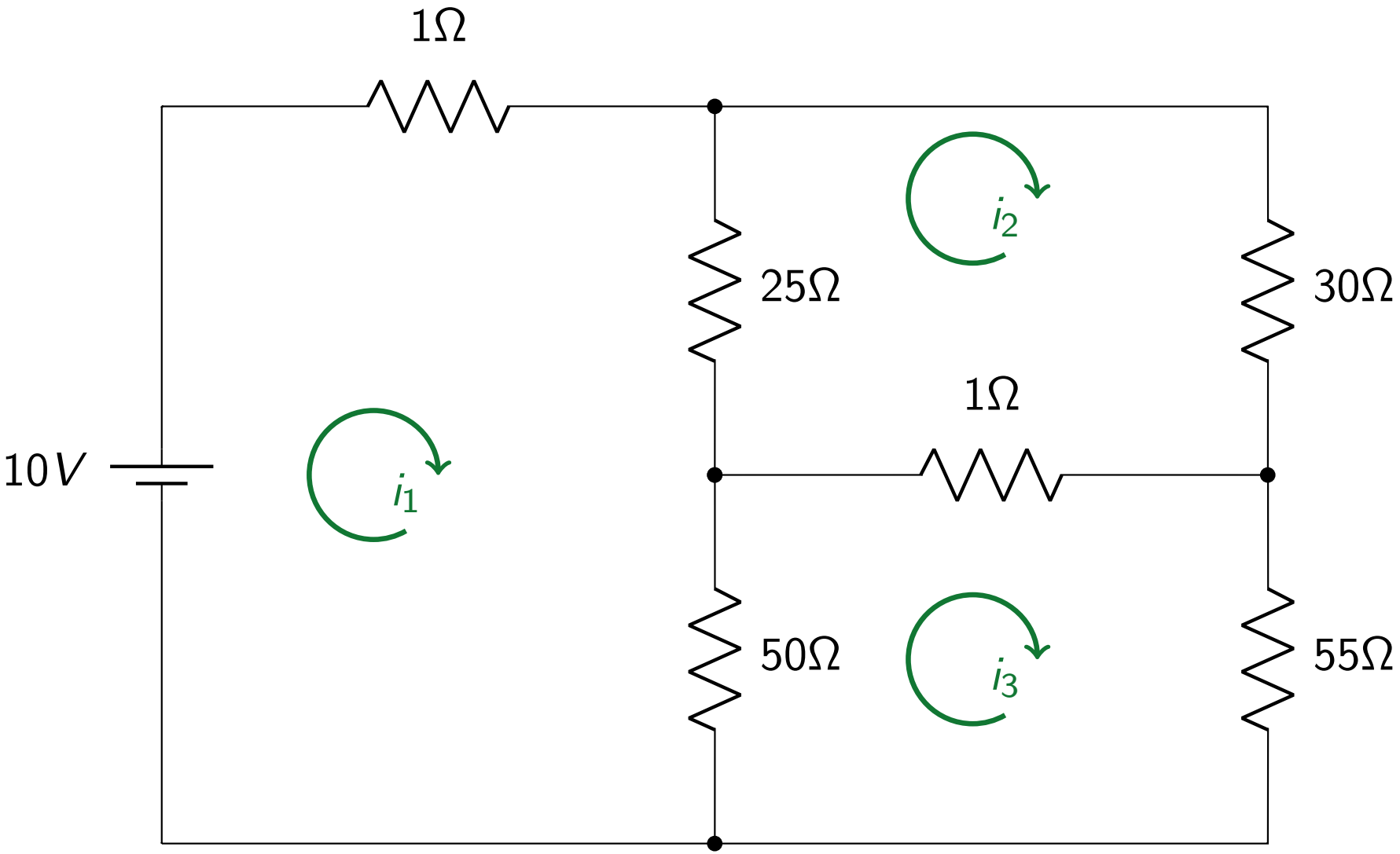

$$i_1 \approx 0.2449, \quad i_2 \approx 0.1114, \quad i_3 \approx 0.1166$$

Equations from previous slide:

i_1 **loop:** $-10 + i_1 + 25(i_1 - i_2) + 50(i_1 - i_3) = 0$

i_2 **loop:** $25(i_2 - i_1) + 30i_2 + (i_2 - i_3) = 0$

i_3 **loop:** $50(i_3 - i_1) + (i_3 - i_2) + 55i_3 = 0$

$$76i_1 - 25i_2 - 50i_3 = 10$$
$$-25i_1 + 56i_2 - i_3 = 0$$
$$-50i_1 - i_2 + 106i_3 = 0$$

Things to Keep in Mind

- Set up your loop currents in any direction (clockwise or counter-clockwise), then follow them around in that direction.

Things to Keep in Mind

- Set up your loop currents in any direction (clockwise or counter-clockwise), then follow them around in that direction.
- If your actual flow is not in the direction you chose, you'll simply get a negative number for your current

Things to Keep in Mind

- Set up your loop currents in any direction (clockwise or counter-clockwise), then follow them around in that direction.
- If your actual flow is not in the direction you chose, you'll simply get a negative number for your current
- We're counting up voltage drops around a loop. A voltage DROP is high to low.

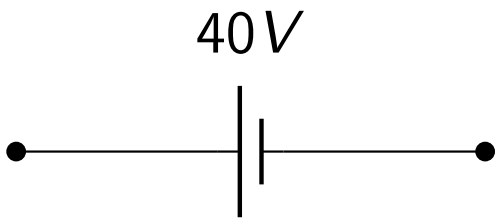

Things to Keep in Mind

- Set up your loop currents in any direction (clockwise or counter-clockwise), then follow them around in that direction.
- If your actual flow is not in the direction you chose, you'll simply get a negative number for your current
- We're counting up voltage drops around a loop. A voltage DROP is high to low.

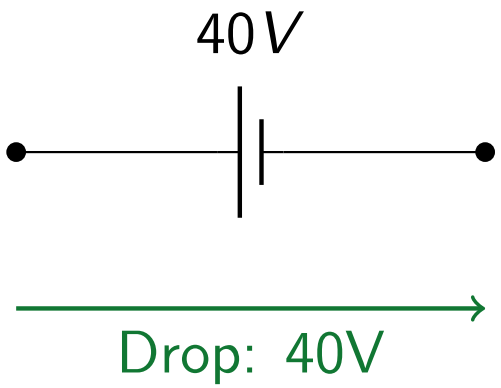

Things to Keep in Mind

- Set up your loop currents in any direction (clockwise or counter-clockwise), then follow them around in that direction.
- If your actual flow is not in the direction you chose, you'll simply get a negative number for your current
- We're counting up voltage drops around a loop. A voltage DROP is high to low.

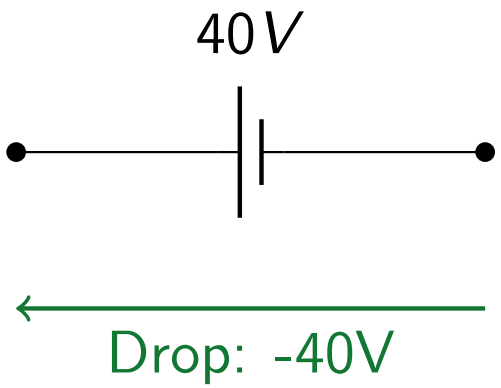

Things to Keep in Mind

- Set up your loop currents in any direction (clockwise or counter-clockwise), then follow them around in that direction.
- If your actual flow is not in the direction you chose, you'll simply get a negative number for your current
- We're counting up voltage drops around a loop. A voltage DROP is high to low.
- Branch current is the NET effect of the loop currents.

Things to Keep in Mind

- Set up your loop currents in any direction (clockwise or counter-clockwise), then follow them around in that direction.

- If your actual flow is not in the direction you chose, you'll simply get a negative number for your current

- We're counting up voltage drops around a loop. A voltage DROP is high to low.

- Branch current is the NET effect of the loop currents.

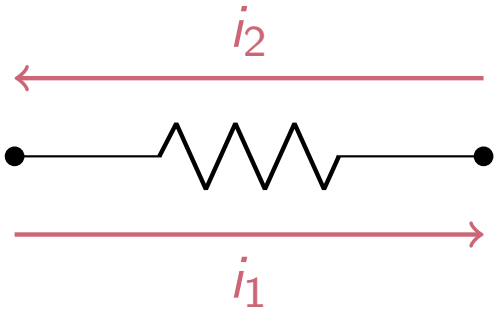

Things to Keep in Mind

- Set up your loop currents in any direction (clockwise or counter-clockwise), then follow them around in that direction.
- If your actual flow is not in the direction you chose, you'll simply get a negative number for your current
- We're counting up voltage drops around a loop. A voltage DROP is high to low.
- Branch current is the NET effect of the loop currents.

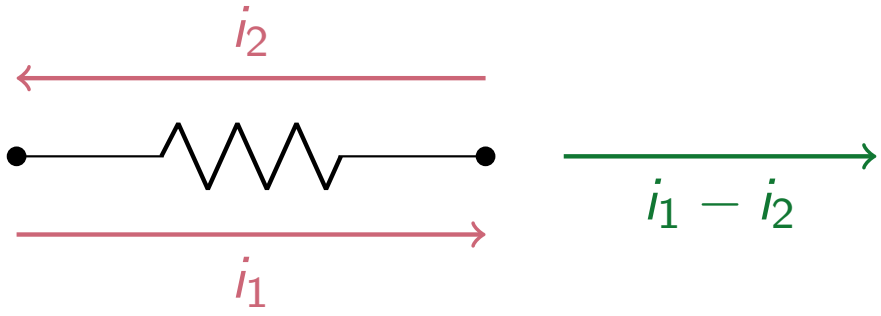

Things to Keep in Mind

- Set up your loop currents in any direction (clockwise or counter-clockwise), then follow them around in that direction.
- If your actual flow is not in the direction you chose, you'll simply get a negative number for your current
- We're counting up voltage drops around a loop. A voltage DROP is high to low.
- Branch current is the NET effect of the loop currents.

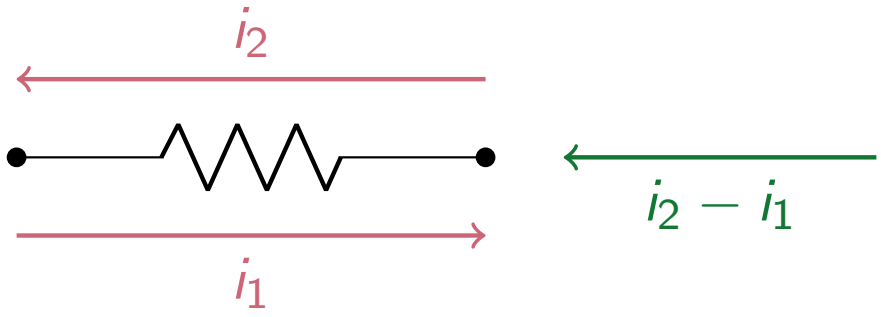

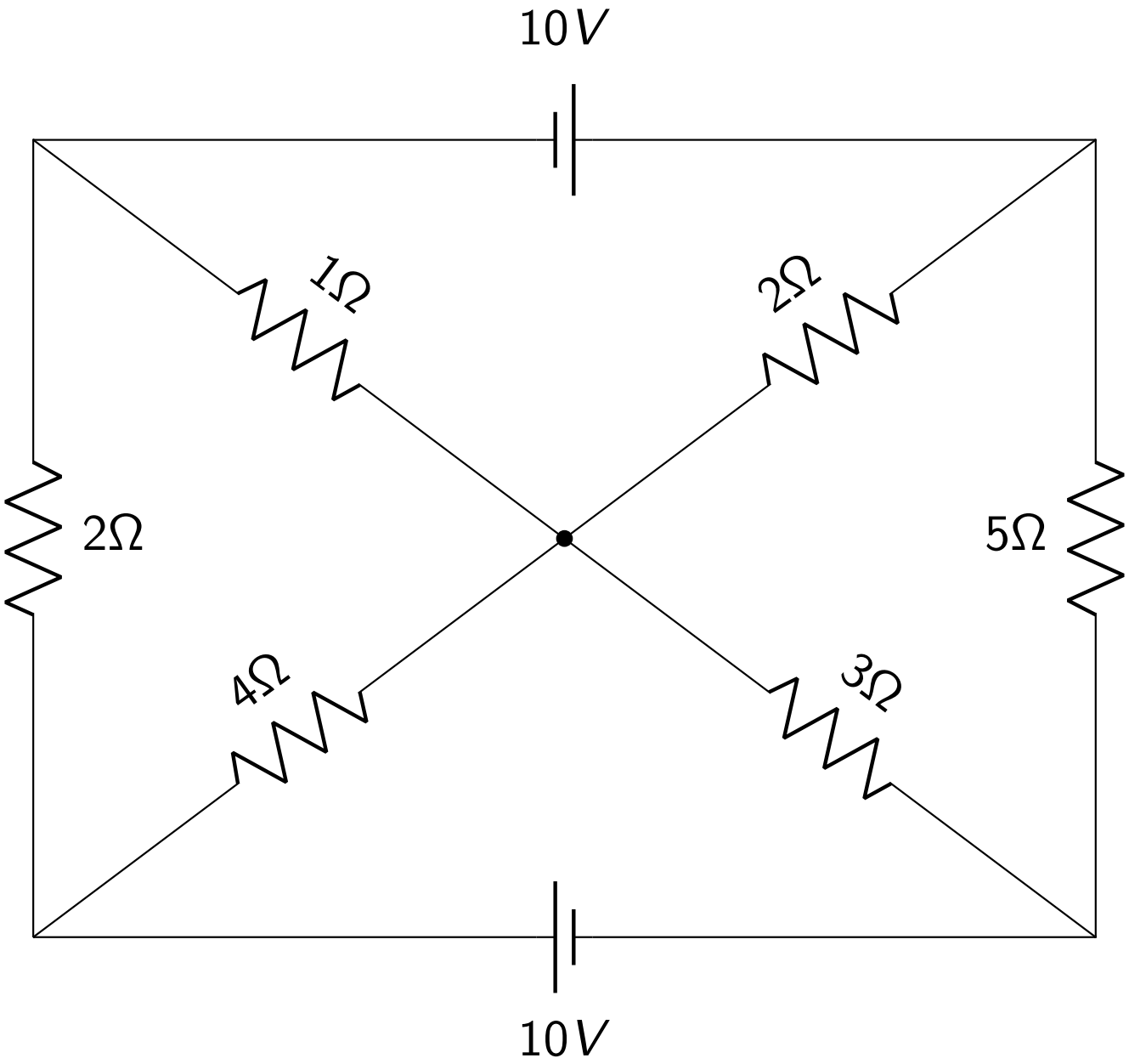
10 V
1Ω
2Ω
2Ω
5Ω
4Ω
3Ω
10 V

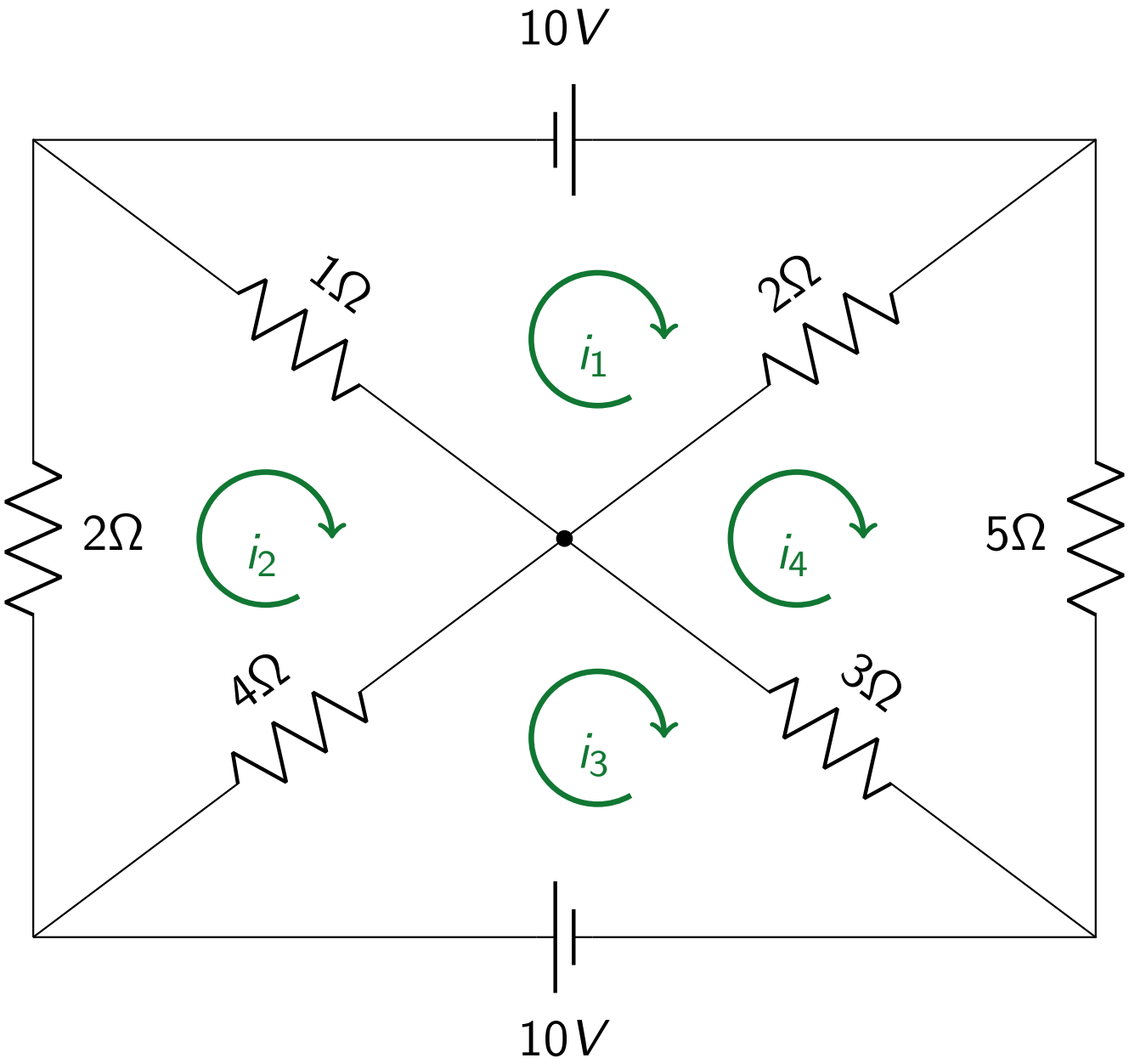
10 V
1Ω
2Ω
i_1
2Ω
i_2
i_4
5Ω
4Ω
3Ω
i_3
10 V

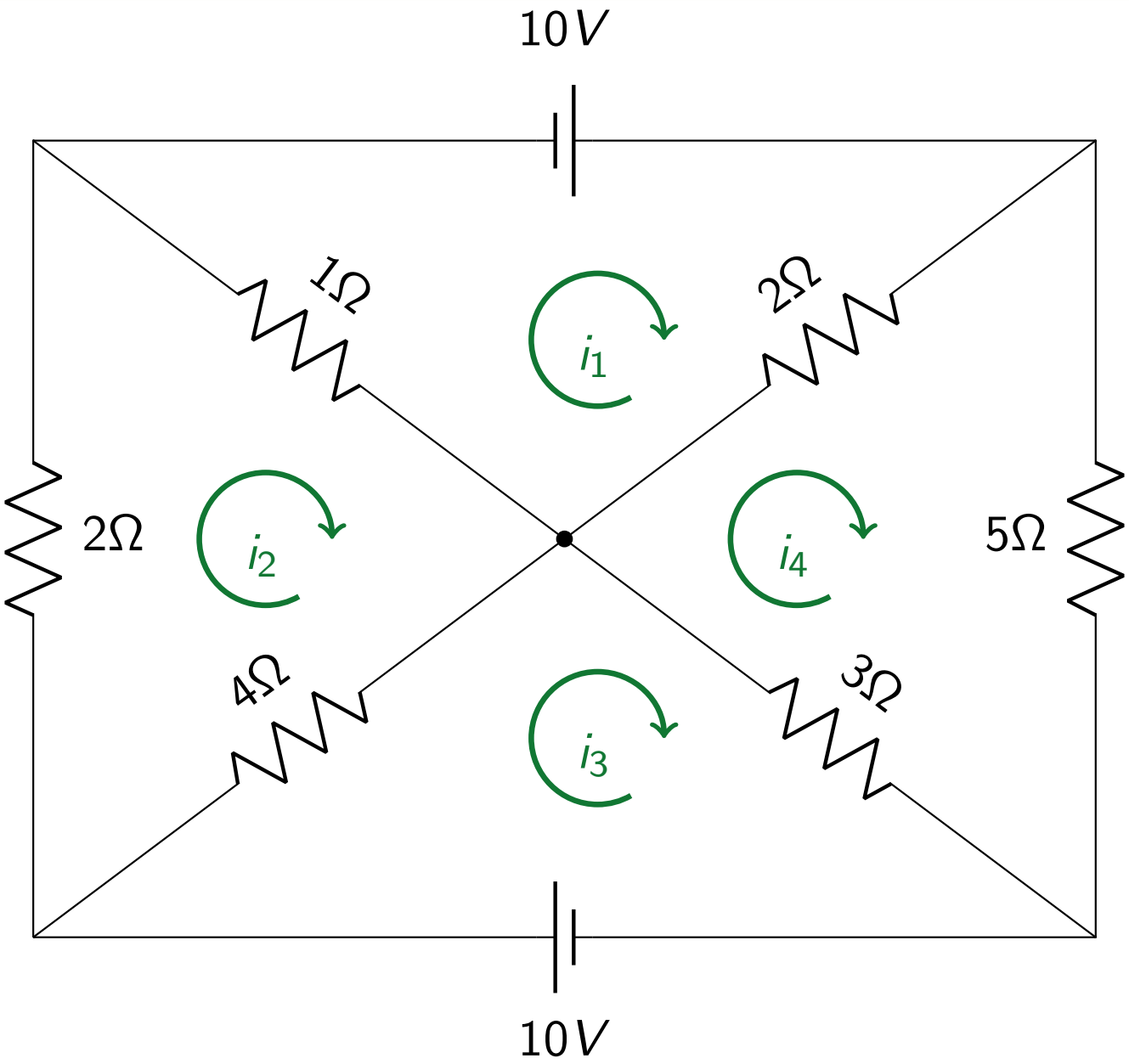

$i_1 \approx 6.2321 \quad i_2 \approx 3.4821 \quad i_3 \approx 4.5357 \quad i_4 \approx 2.6071$

Equations from Previous Slide:

i_1 **loop:** $-10 + 2(i_1 - i_4) + (i_1 - i_2) = 0$

i_2 **loop:** $2i_2 + (i_2 - i_1) + 4(i_2 - i_3) = 0$

i_3 **loop:** $-10 + 4(i_3 - i_2) + 3(i_3 - i_4) = 0$

i_4 **loop:** $5i_4 + 3(i_4 - i_3) + 2(i_4 - i_1) = 0$

$$\begin{array}{rcrcrcrcr} 3i_1 & - & i_2 & + & 0i_3 & - & 2i_4 & = & 10 \\ -i_1 & + & 7i_2 & - & 4i_3 & + & 0i_4 & = & 0 \\ 0i_1 & - & 4i_2 & + & 7i_3 & - & 3i_4 & = & 10 \\ -2i_1 & + & 0i_2 & - & 3i_3 & + & 10i_4 & = & 0 \end{array}$$

Things to Keep in Mind

- Set up your loop currents in any direction (clockwise or counter-clockwise), then follow them around in that direction.

Things to Keep in Mind

- Set up your loop currents in any direction (clockwise or counter-clockwise), then follow them around in that direction.
- If your actual flow is not in the direction you chose, you'll simply get a negative number for your current

Things to Keep in Mind

- Set up your loop currents in any direction (clockwise or counter-clockwise), then follow them around in that direction.
- If your actual flow is not in the direction you chose, you'll simply get a negative number for your current
- We're counting up voltage drops around a loop. A voltage DROP is high to low.

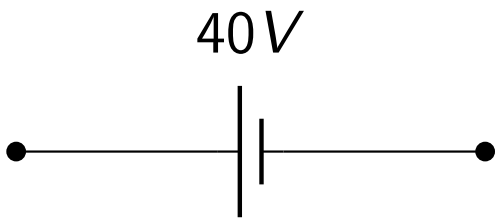

Things to Keep in Mind

- Set up your loop currents in any direction (clockwise or counter-clockwise), then follow them around in that direction.
- If your actual flow is not in the direction you chose, you'll simply get a negative number for your current
- We're counting up voltage drops around a loop. A voltage DROP is high to low.

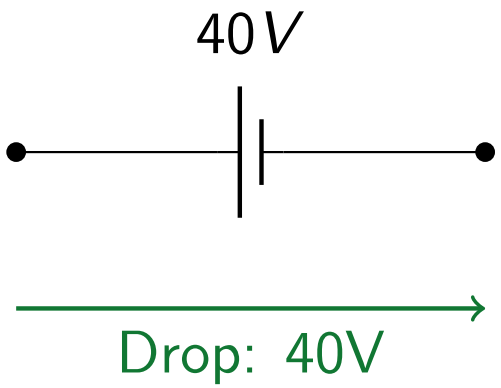

Things to Keep in Mind

- Set up your loop currents in any direction (clockwise or counter-clockwise), then follow them around in that direction.
- If your actual flow is not in the direction you chose, you'll simply get a negative number for your current
- We're counting up voltage drops around a loop. A voltage DROP is high to low.

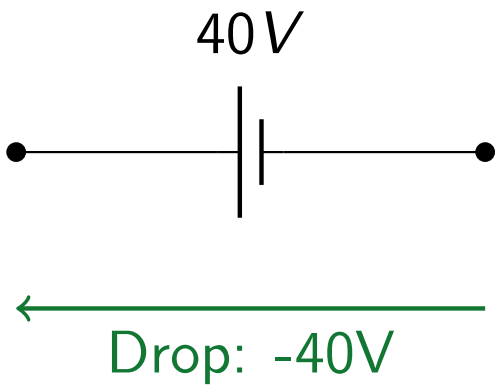

Things to Keep in Mind

- Set up your loop currents in any direction (clockwise or counter-clockwise), then follow them around in that direction.
- If your actual flow is not in the direction you chose, you'll simply get a negative number for your current
- We're counting up voltage drops around a loop. A voltage DROP is high to low.
- Branch current is the NET effect of the loop currents.

Things to Keep in Mind

- Set up your loop currents in any direction (clockwise or counter-clockwise), then follow them around in that direction.
- If your actual flow is not in the direction you chose, you'll simply get a negative number for your current
- We're counting up voltage drops around a loop. A voltage DROP is high to low.
- Branch current is the NET effect of the loop currents.

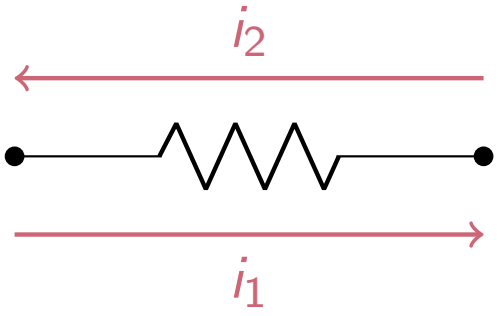

Things to Keep in Mind

- Set up your loop currents in any direction (clockwise or counter-clockwise), then follow them around in that direction.
- If your actual flow is not in the direction you chose, you'll simply get a negative number for your current
- We're counting up voltage drops around a loop. A voltage DROP is high to low.
- Branch current is the NET effect of the loop currents.

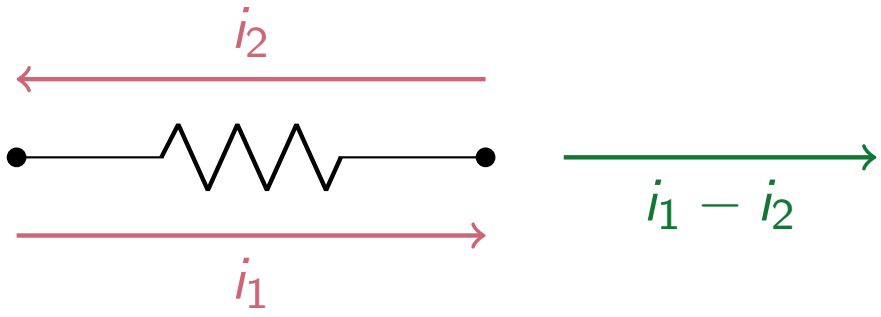

Things to Keep in Mind

- Set up your loop currents in any direction (clockwise or counter-clockwise), then follow them around in that direction.
- If your actual flow is not in the direction you chose, you'll simply get a negative number for your current
- We're counting up voltage drops around a loop. A voltage DROP is high to low.
- Branch current is the NET effect of the loop currents.

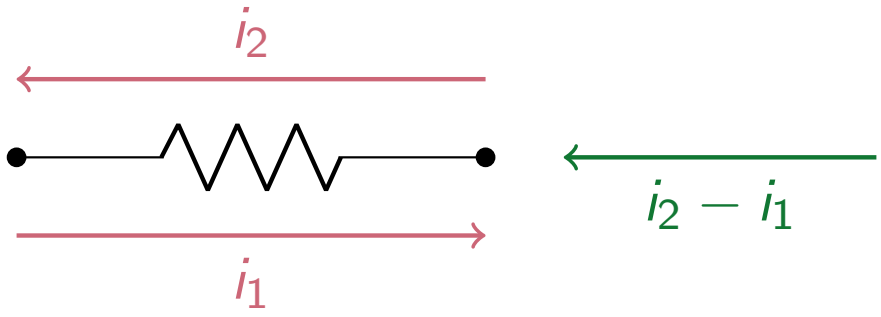

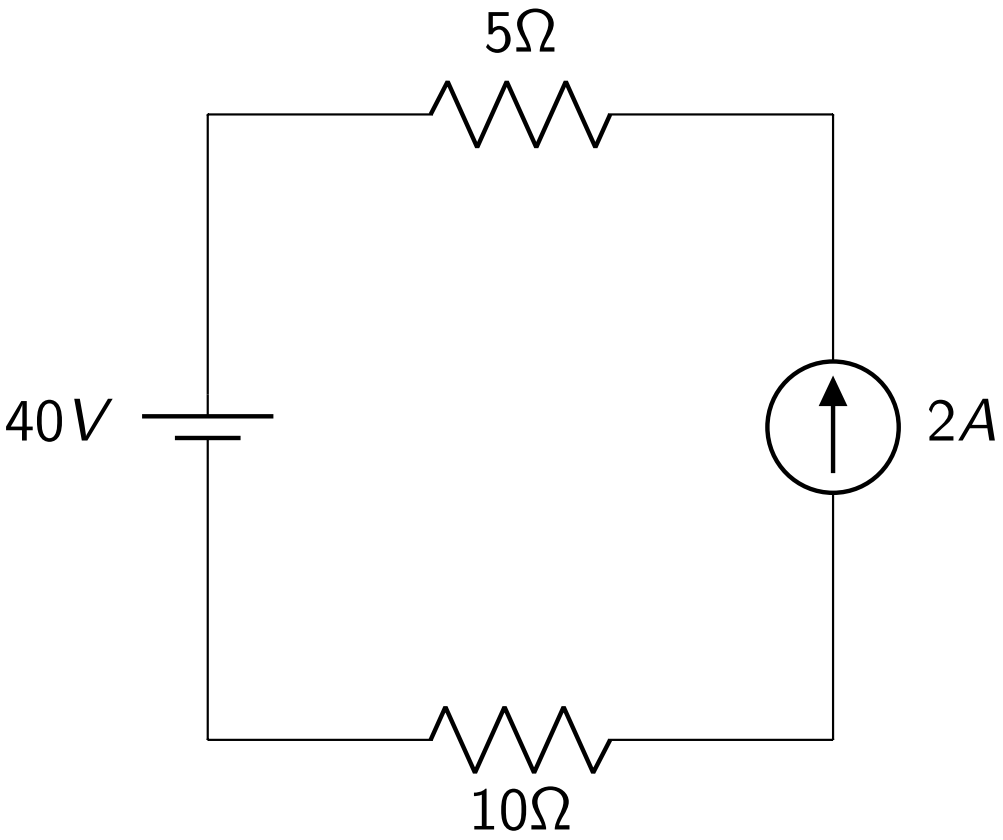
5Ω
40V
2A
10Ω

$$V = IR = \overset{\leftarrow}{2} \times 5 = 10$$

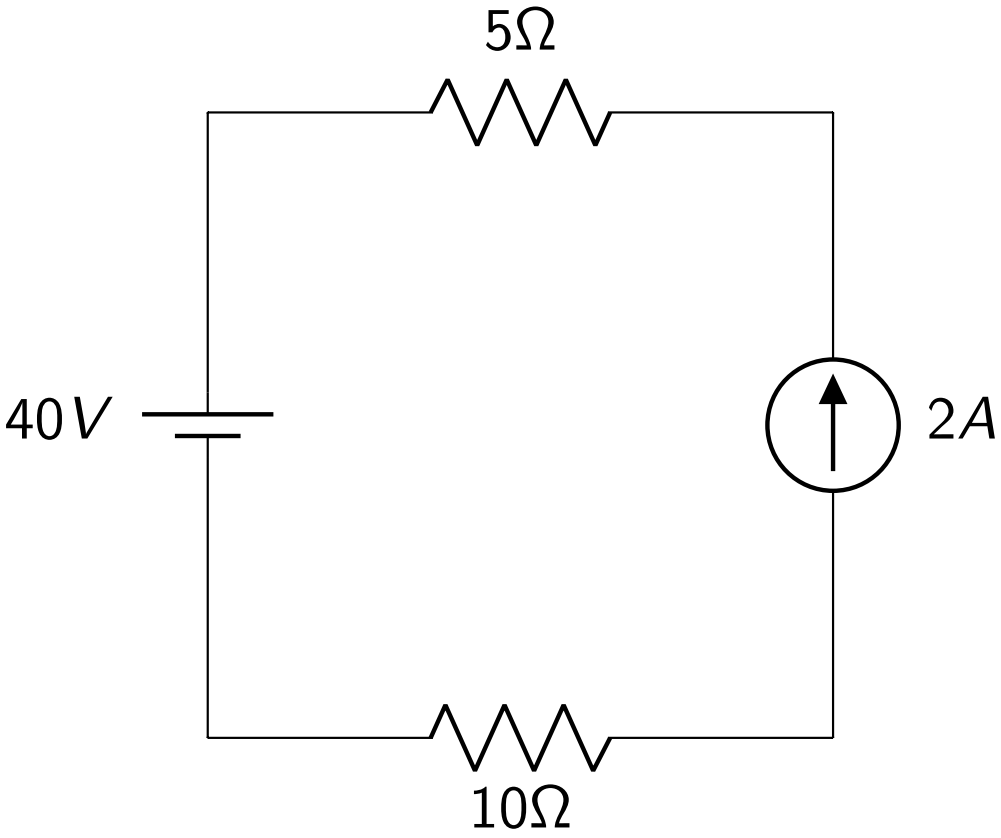

$$V = IR = \overset{\leftarrow}{2} \times 5 = 10$$

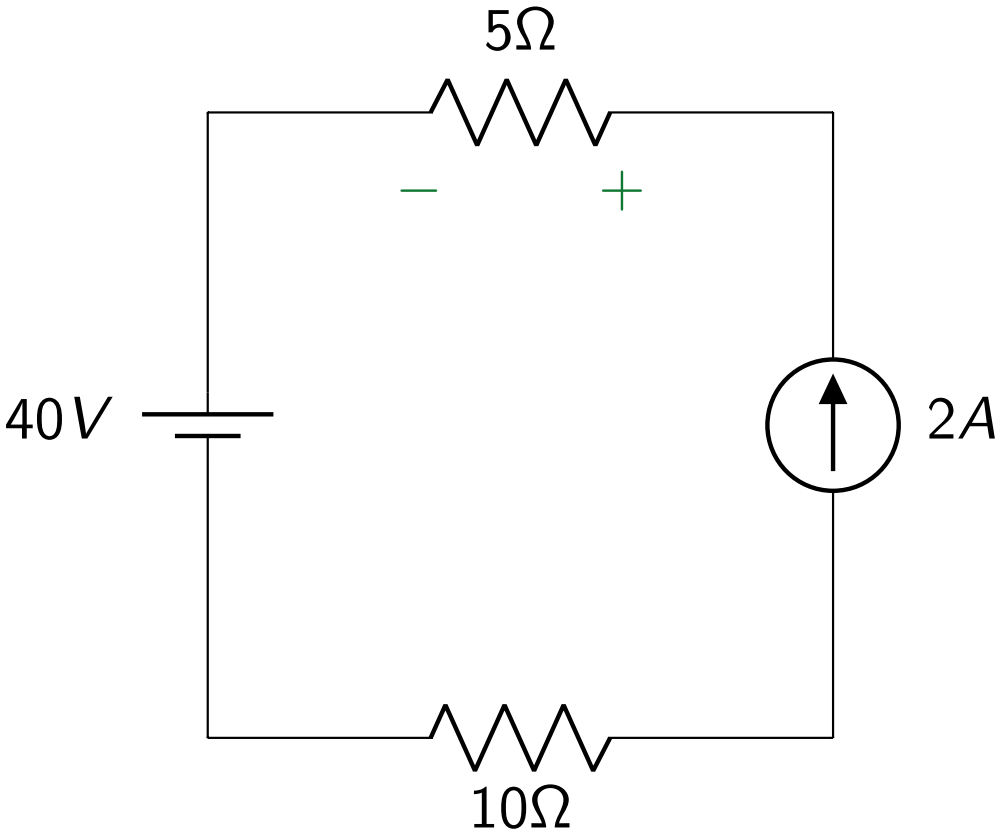

$$V = IR = \overset{\leftarrow}{2} \times 5 = 10$$

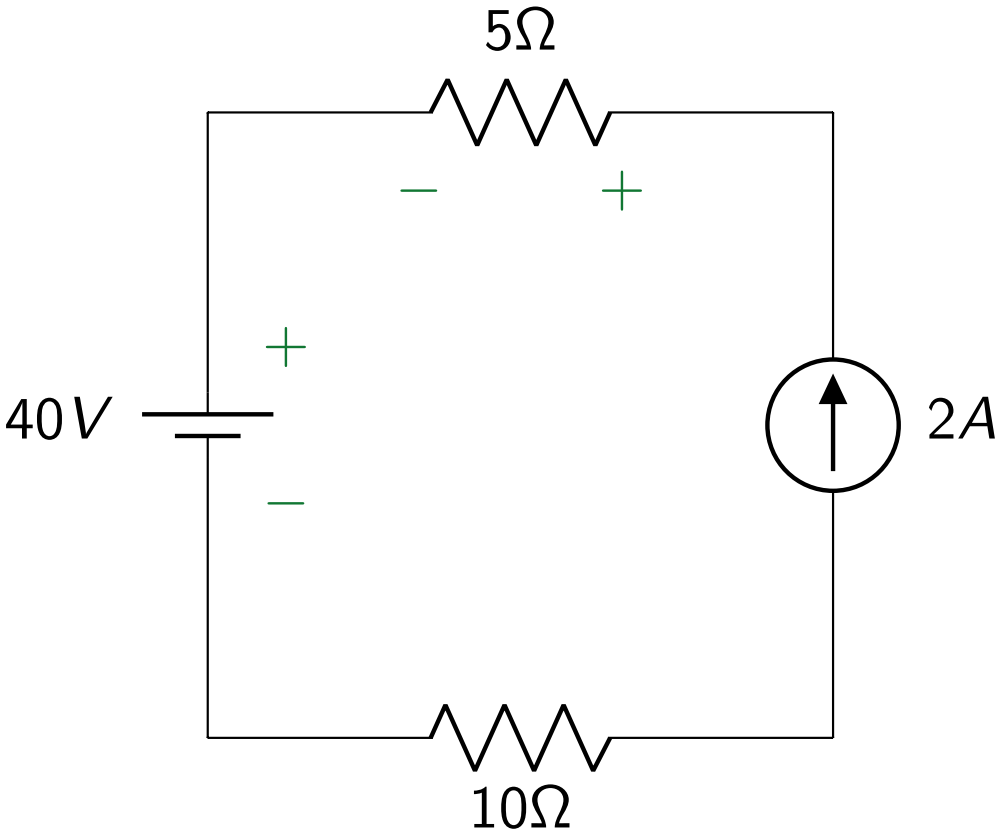

$$V = IR = \overset{\leftarrow}{2} \times 5 = 10$$

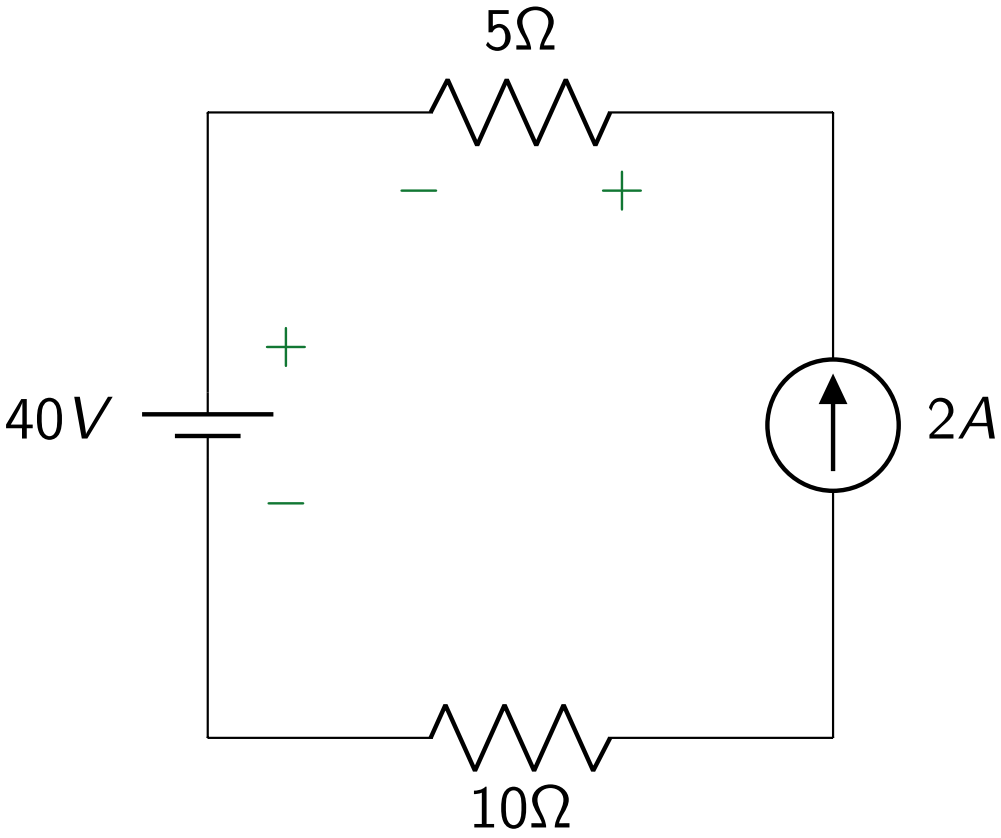

$$V = IR = \overset{\rightarrow}{2} \times 10 = 20$$

$$V = IR = \overset{\leftarrow}{2} \times 5 = 10$$

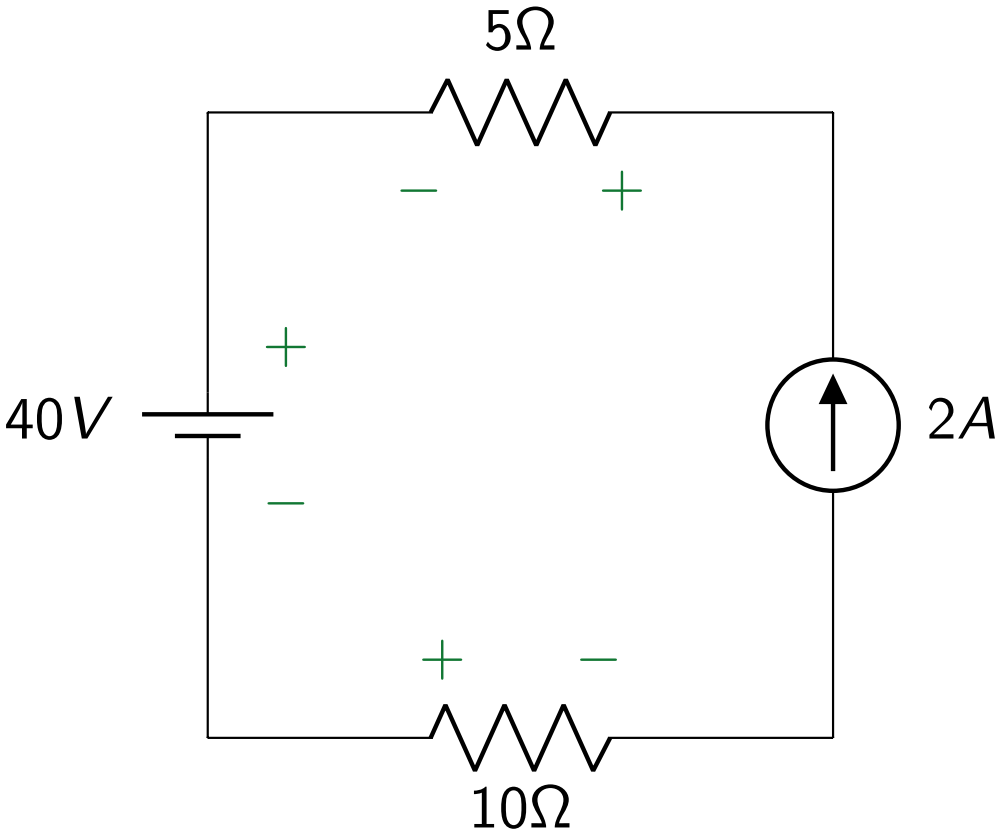

$$V = IR = \overset{\rightarrow}{2} \times 10 = 20$$

$$V = IR = \overset{\leftarrow}{2} \times 5 = 10$$

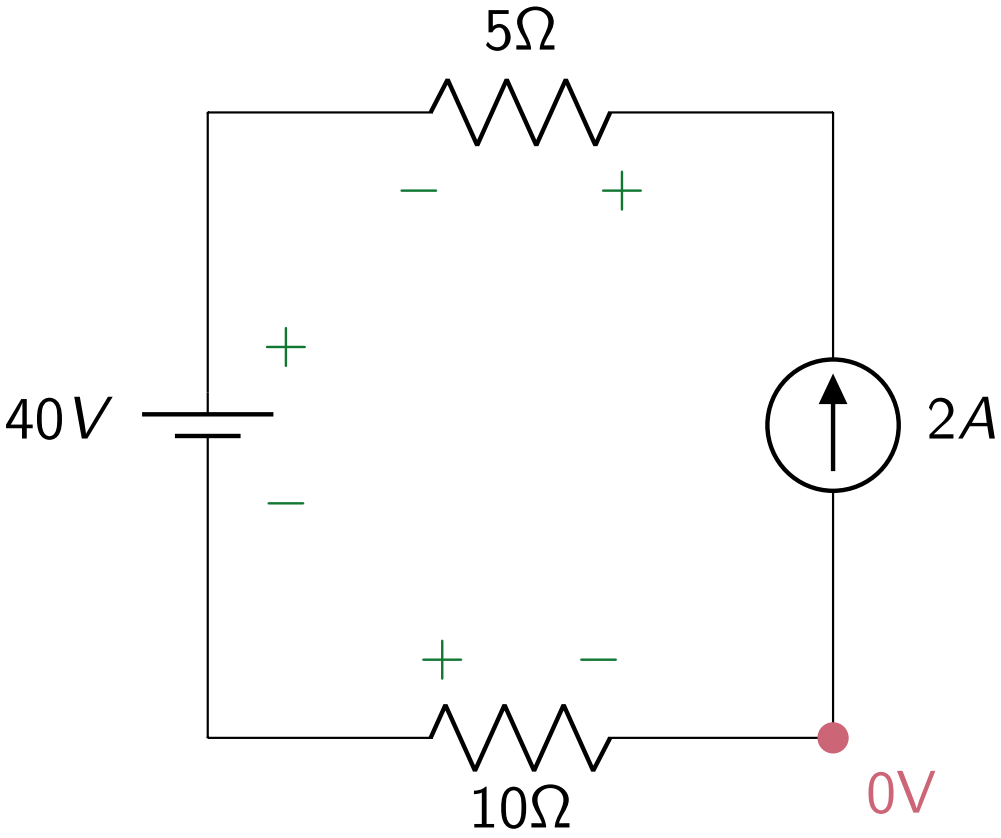

$$V = IR = \overset{\rightarrow}{2} \times 10 = 20$$

$$V = IR = \overset{\leftarrow}{2} \times 5 = 10$$

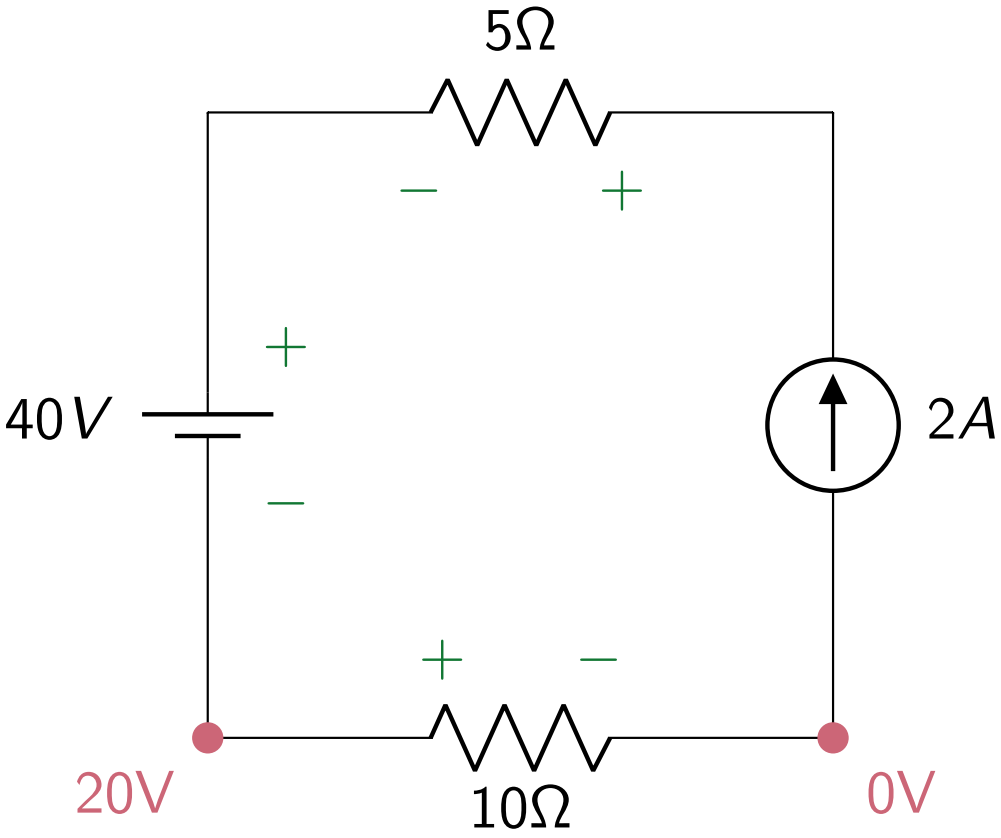

$$V = IR = \overset{\rightarrow}{2} \times 10 = 20$$

$$V = IR = \overset{\leftarrow}{2} \times 5 = 10$$

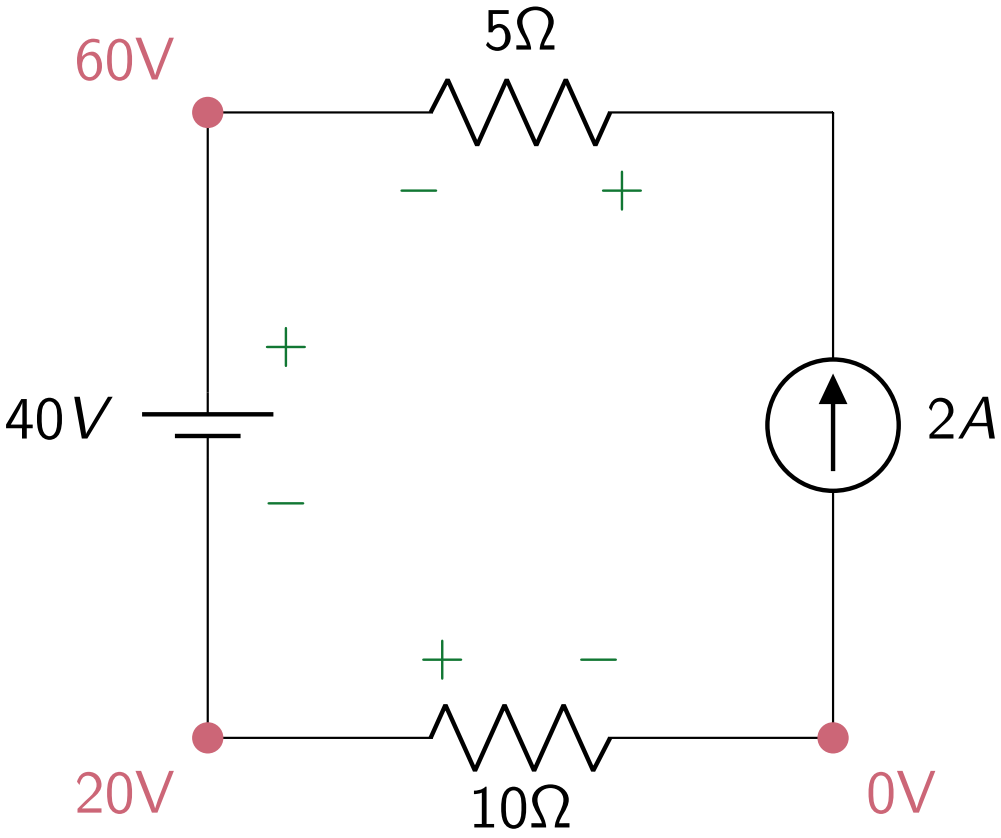

$$V = IR = \overset{\rightarrow}{2} \times 10 = 20$$

$$V = IR = \overset{\leftarrow}{2} \times 5 = 10$$

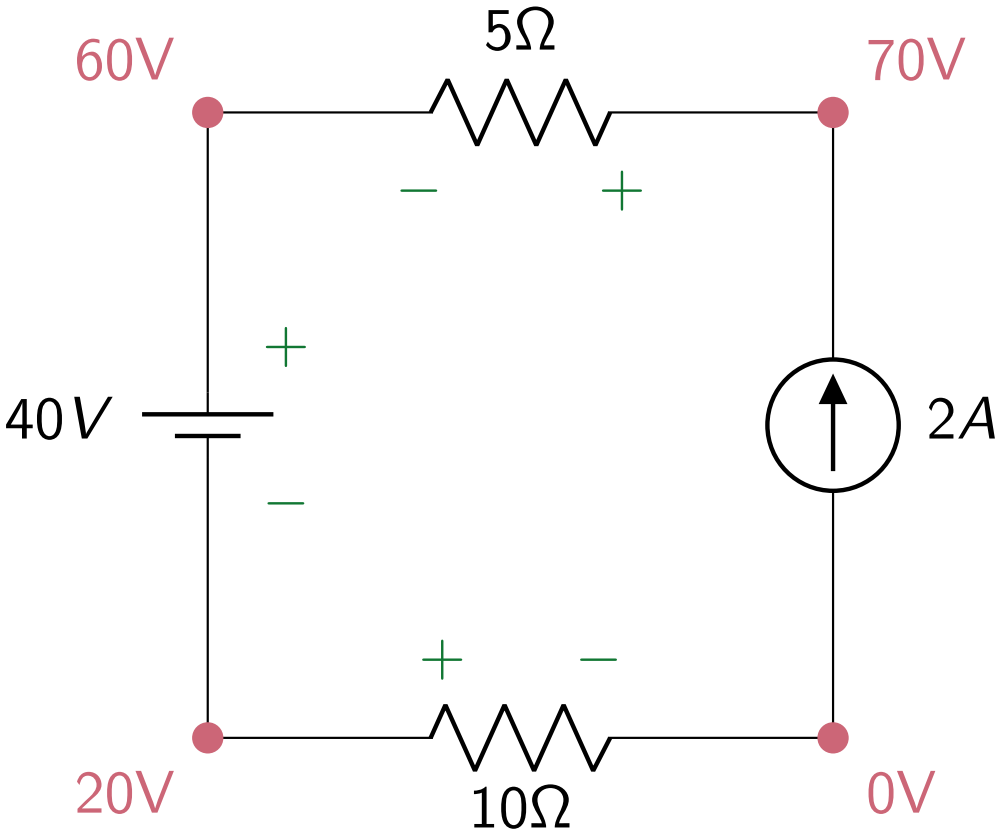

$$V = IR = \overset{\rightarrow}{2} \times 10 = 20$$

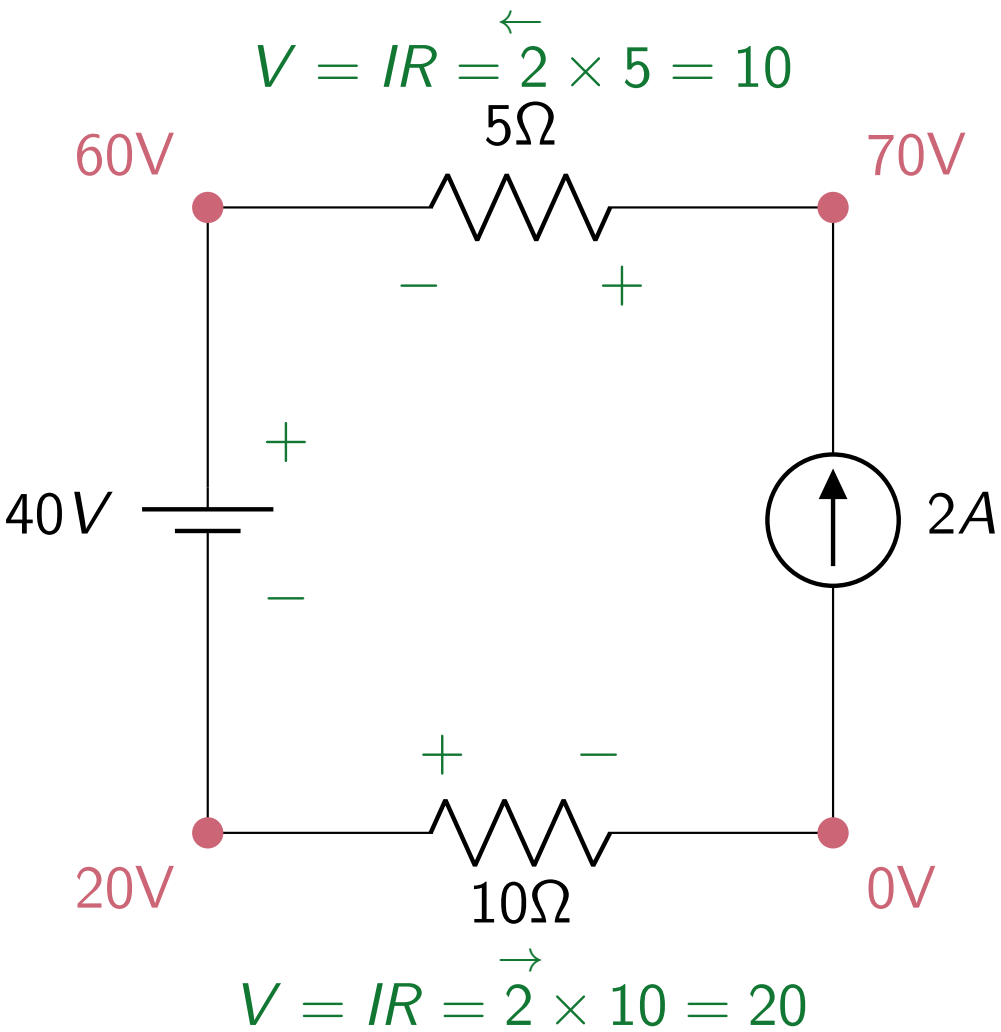

We can imagine replacing the current source with a 70V voltage source, which overpowers the 40V source.

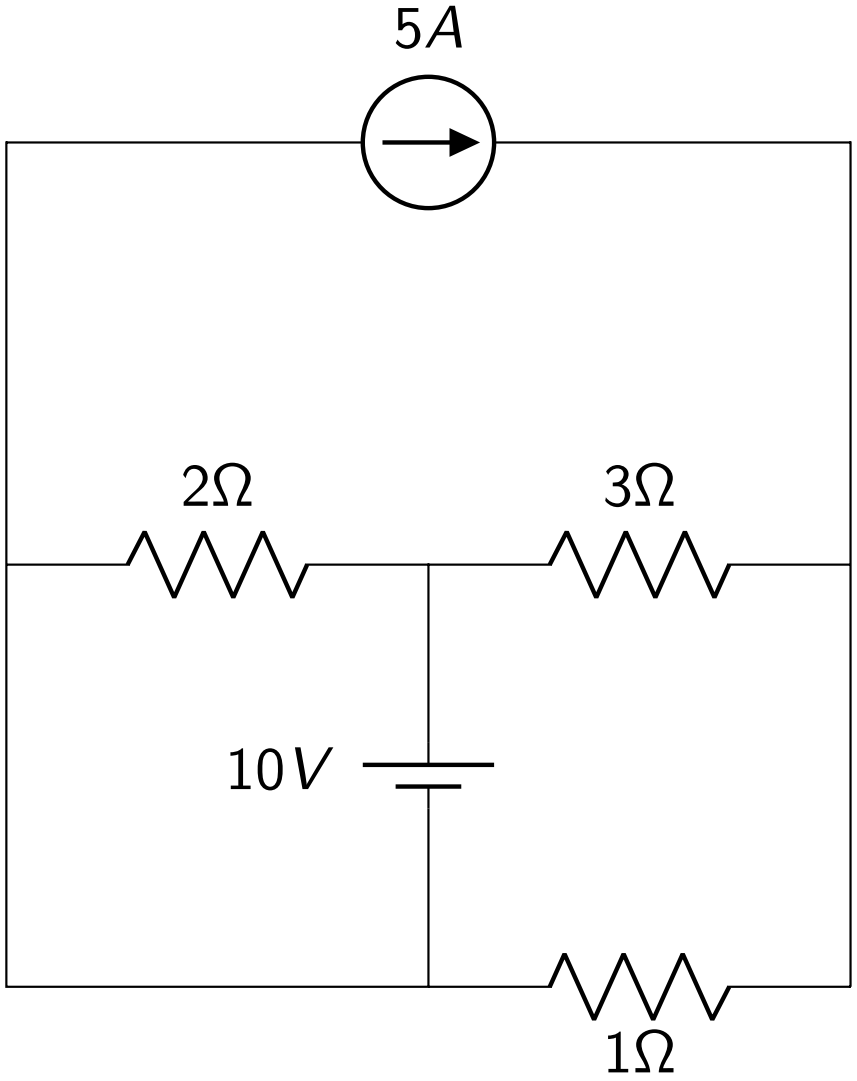
5A
2Ω
3Ω
10V
1Ω

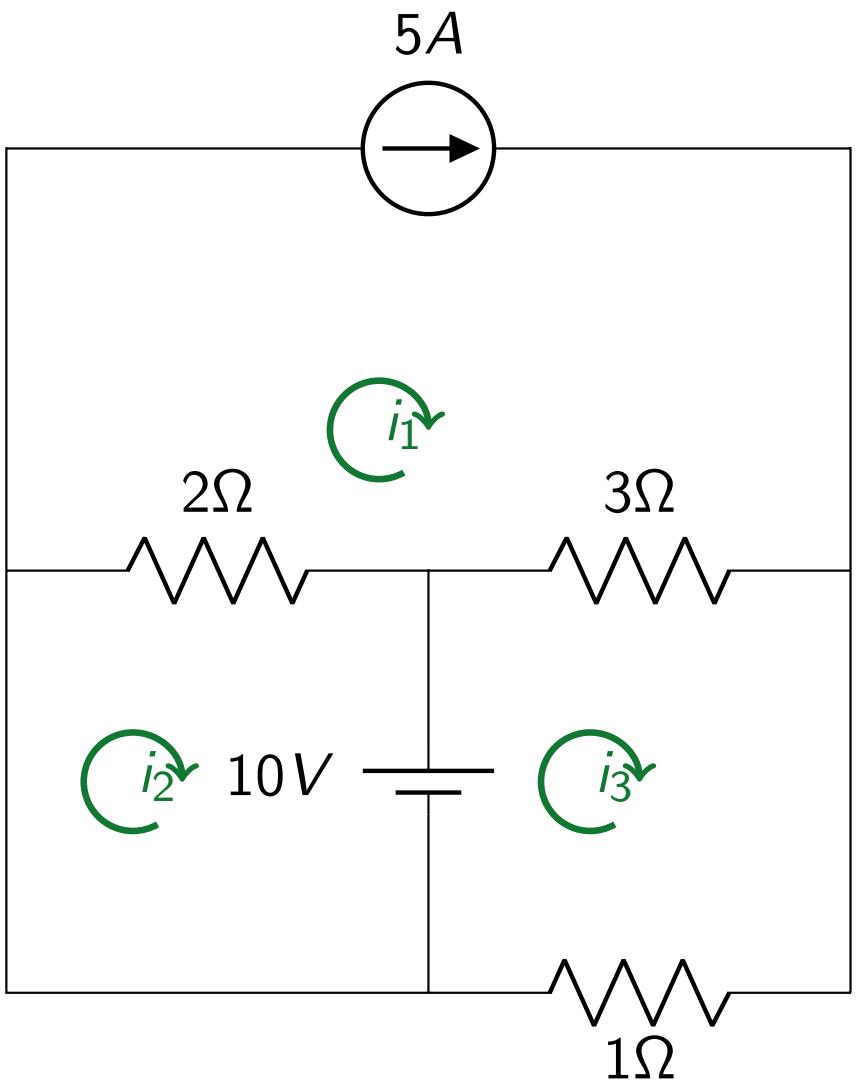
5A
i1
2Ω
3Ω
i2
10V
i3
1Ω

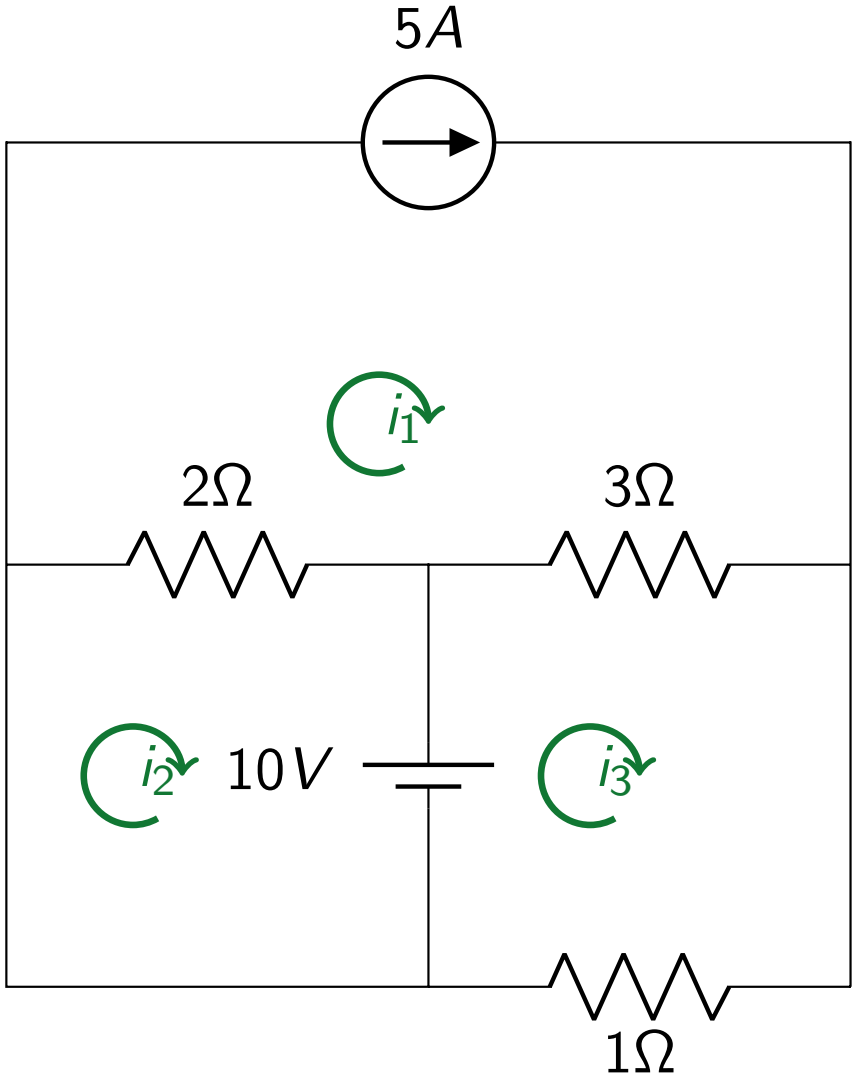

$$i_1 = 5, \quad i_2 = 0, \quad i_3 = \frac{25}{4}$$

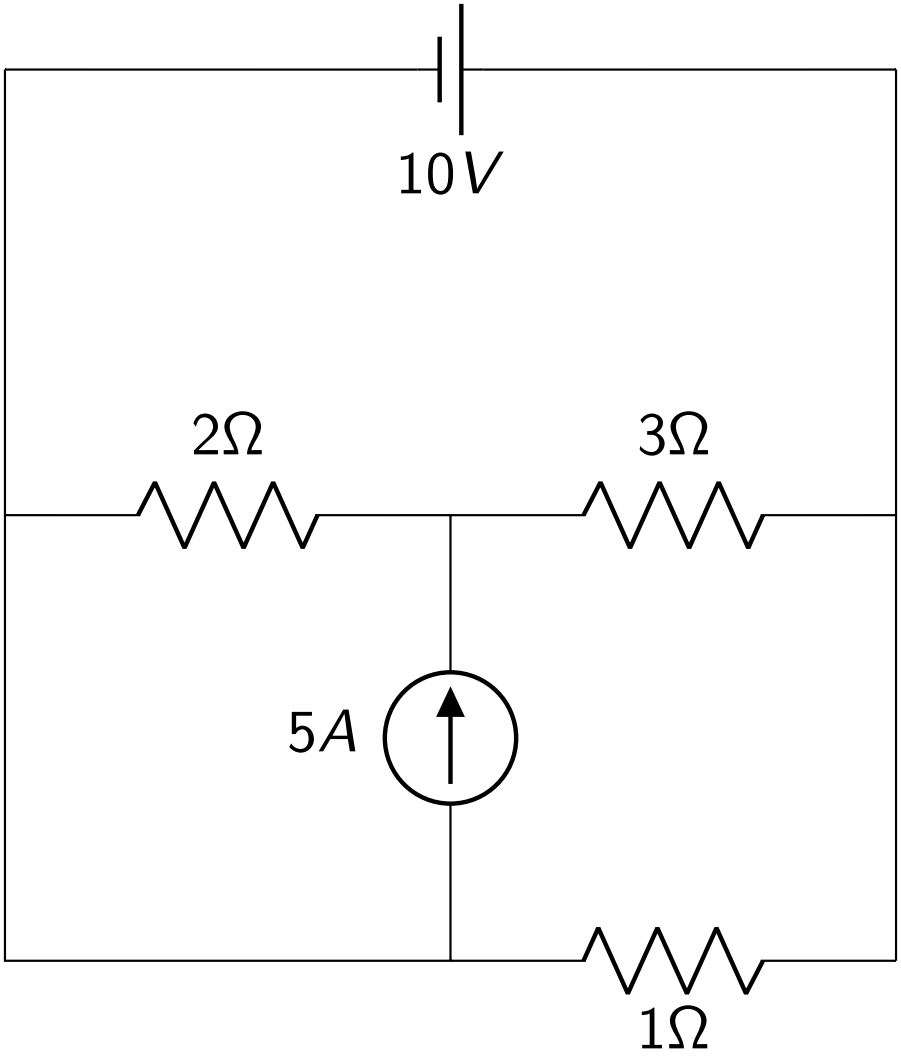
10V
2Ω
3Ω
5A
1Ω

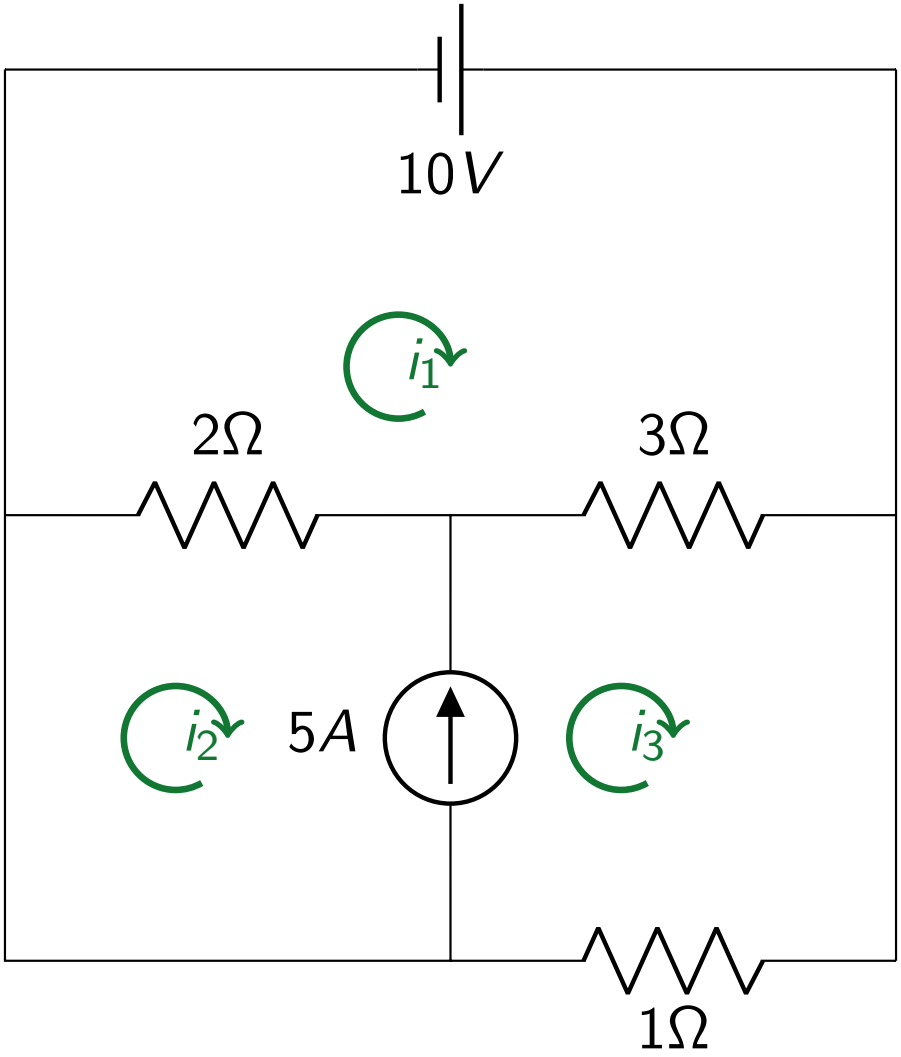
10V
i1
2Ω
3Ω
i2
5A
i3
1Ω

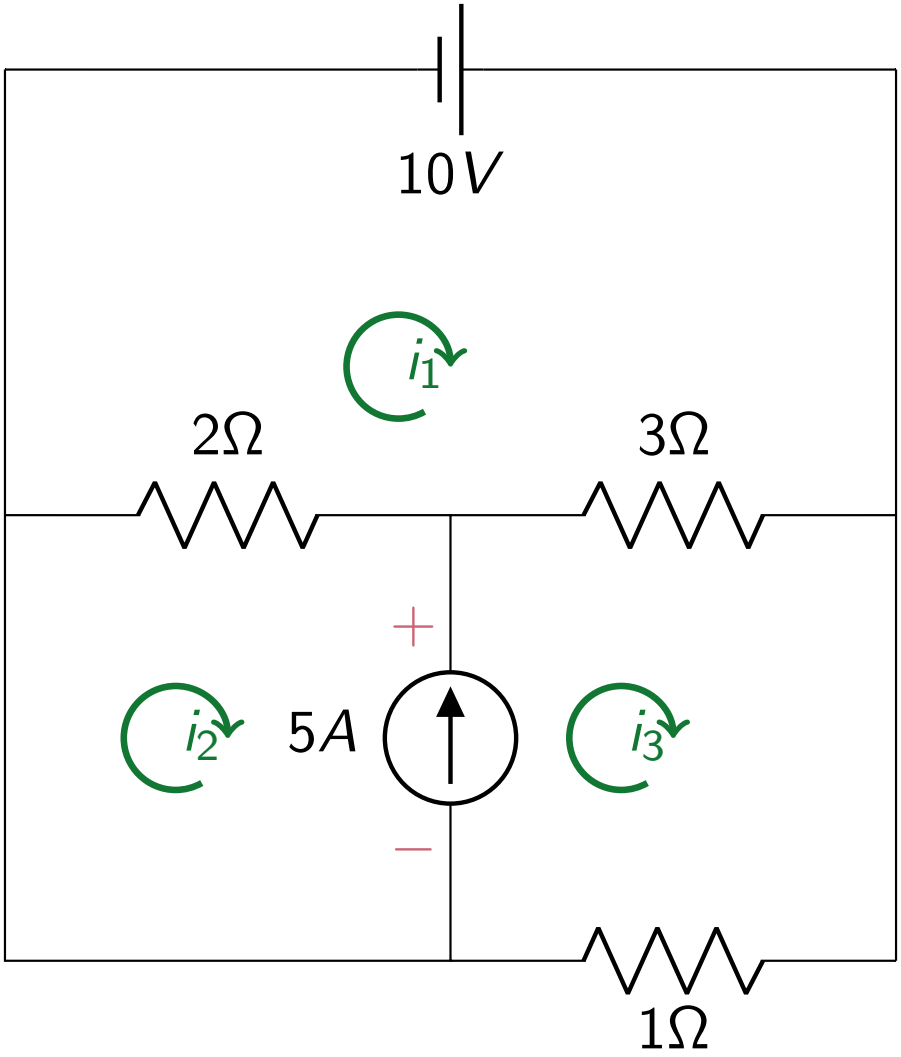

Let E be the voltage drop across the current source.

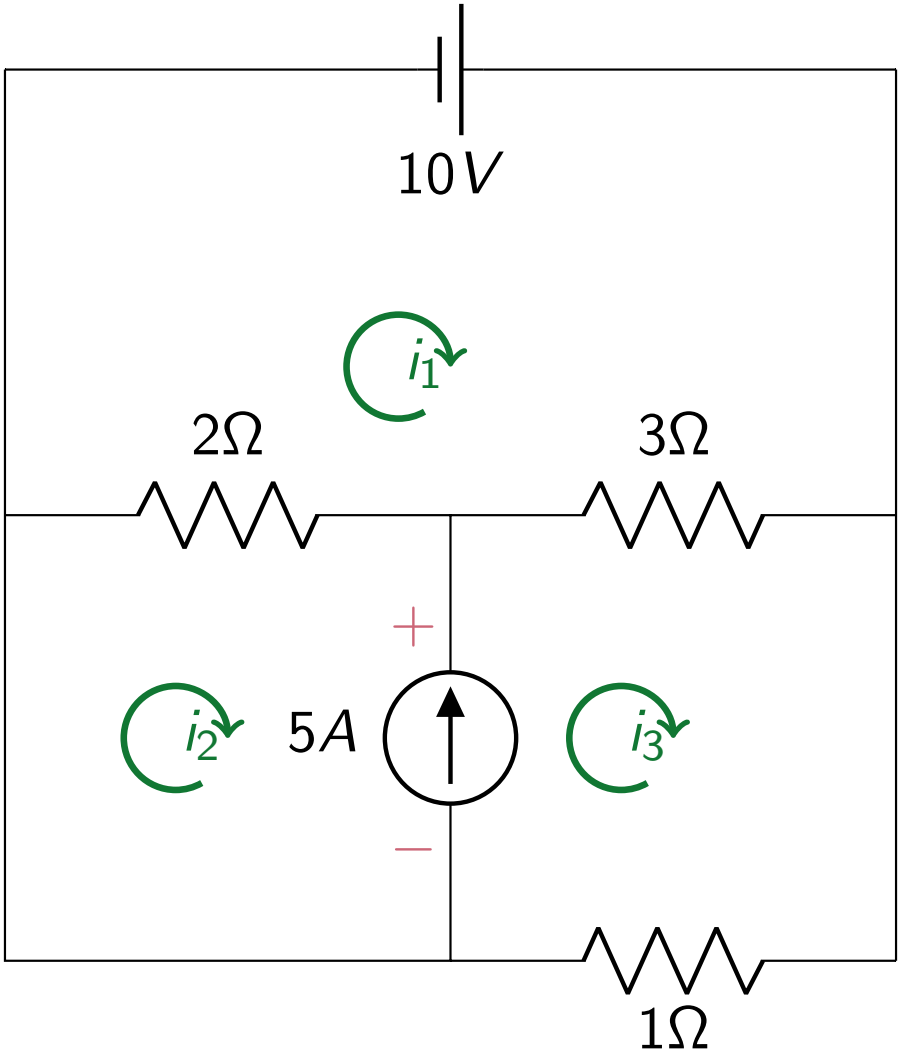

Let E be the voltage drop across the current source.

$$i_1 = 10, \quad i_2 = 5, \quad i_3 = 10, \quad E = 10$$

Equations from previous slide:

Current Source: $5 = i_3 - i_2$

i_1 **Loop:** $-10 + 3(i_1 - i_3) + 2(i_1 - i_2) = 0$

i_2 **Loop:** $2(i_2 - i_1) + E = 0$

i_3 **Loop:** $-E + 3(i_3 - i_1) + i_3 = 0$

$$\begin{array}{rcrcrcrcr} 0i_1 & - & i_2 & + & i_3 & + & 0E & = & 5 \\ 5i_1 & - & 2i_2 & - & 3i_3 & + & 0E & = & 10 \\ -2i_1 & + & 2i_2 & + & 0i_3 & + & E & = & 0 \\ -3i_1 & + & 0i_2 & + & 4i_3 & - & E & = & 0 \end{array}$$

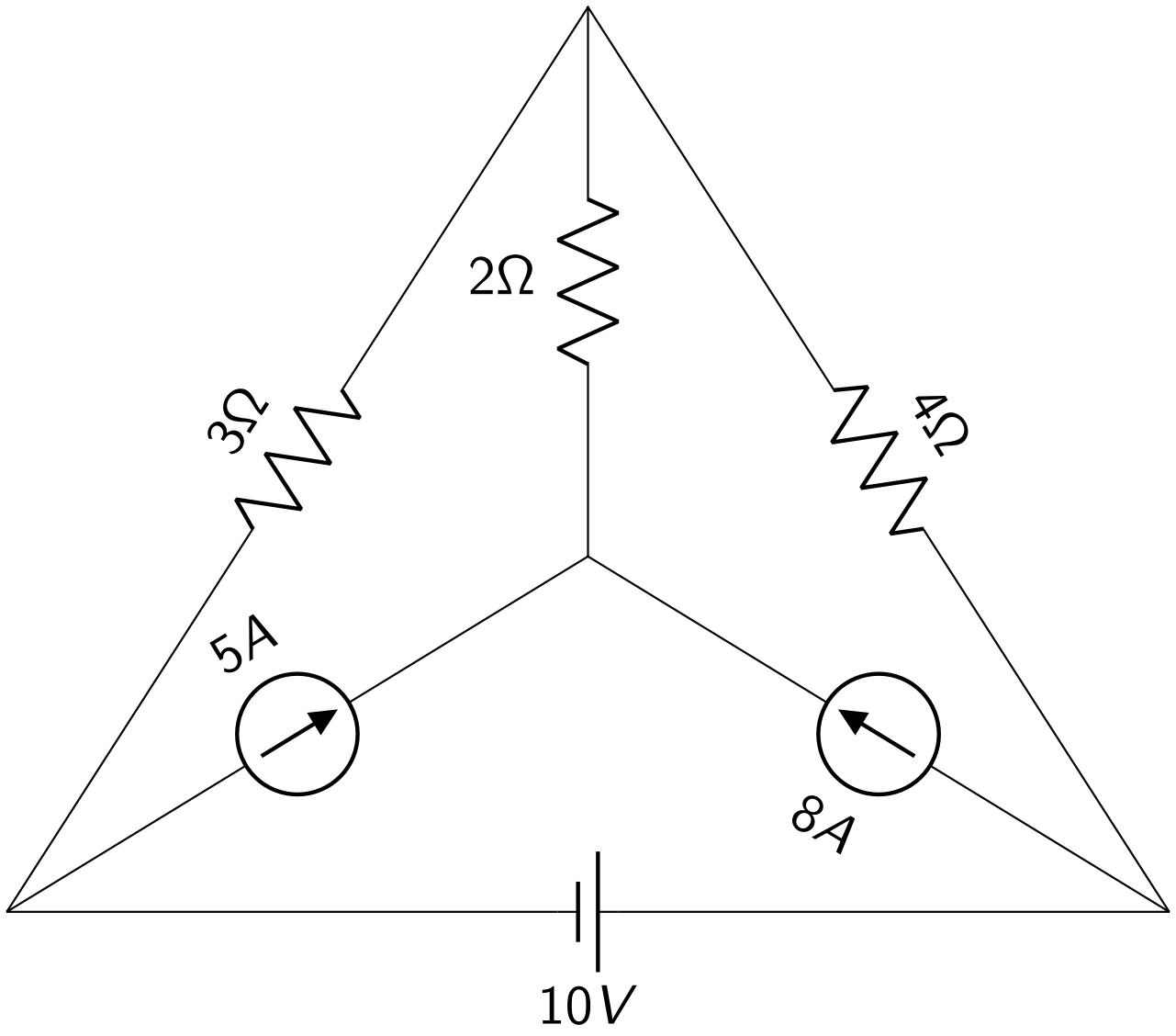
2Ω
3Ω
4Ω
5A
8A
10V

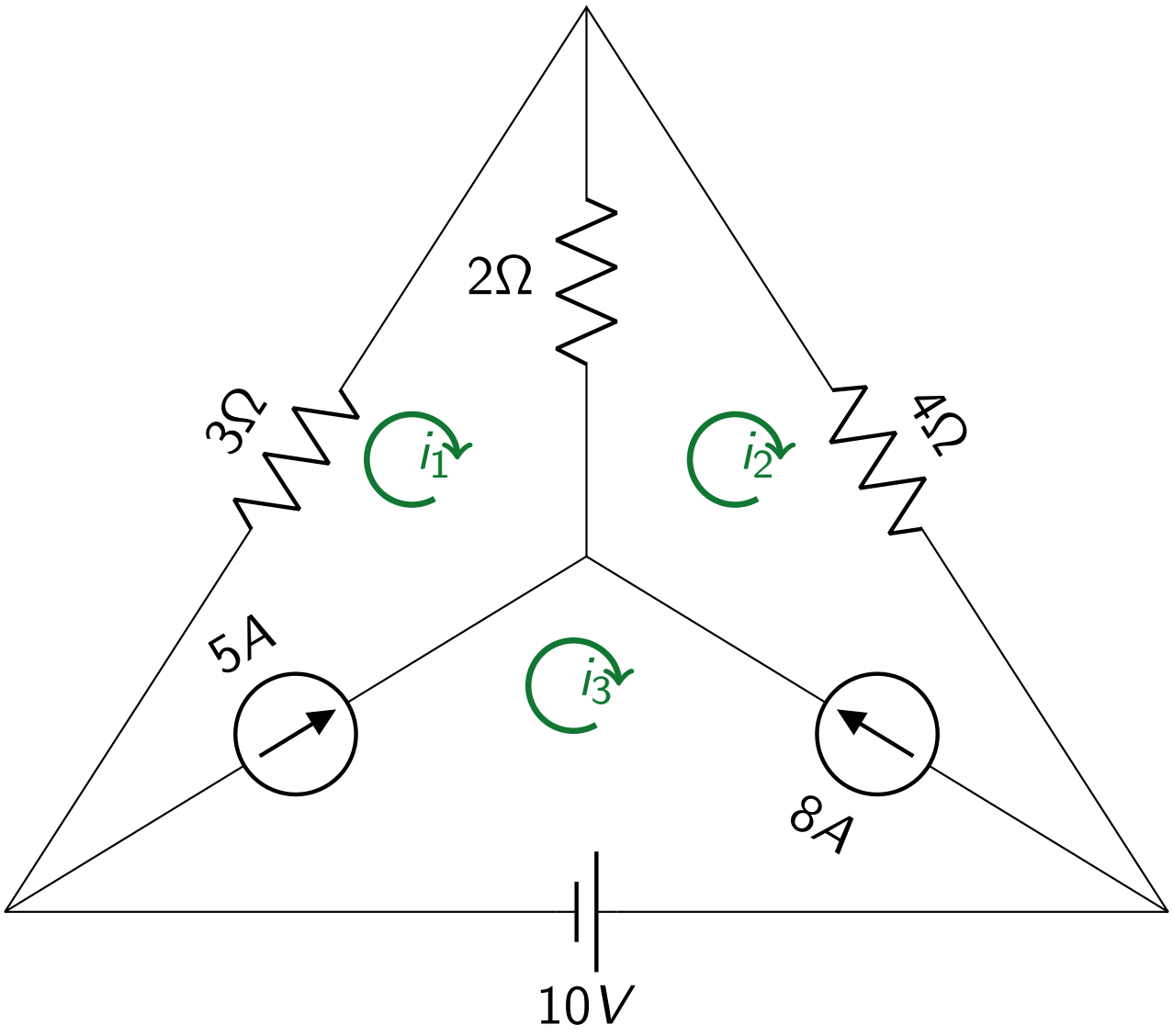
2Ω
3Ω
4Ω
i_1
i_2
i_3
5A
8A
10V

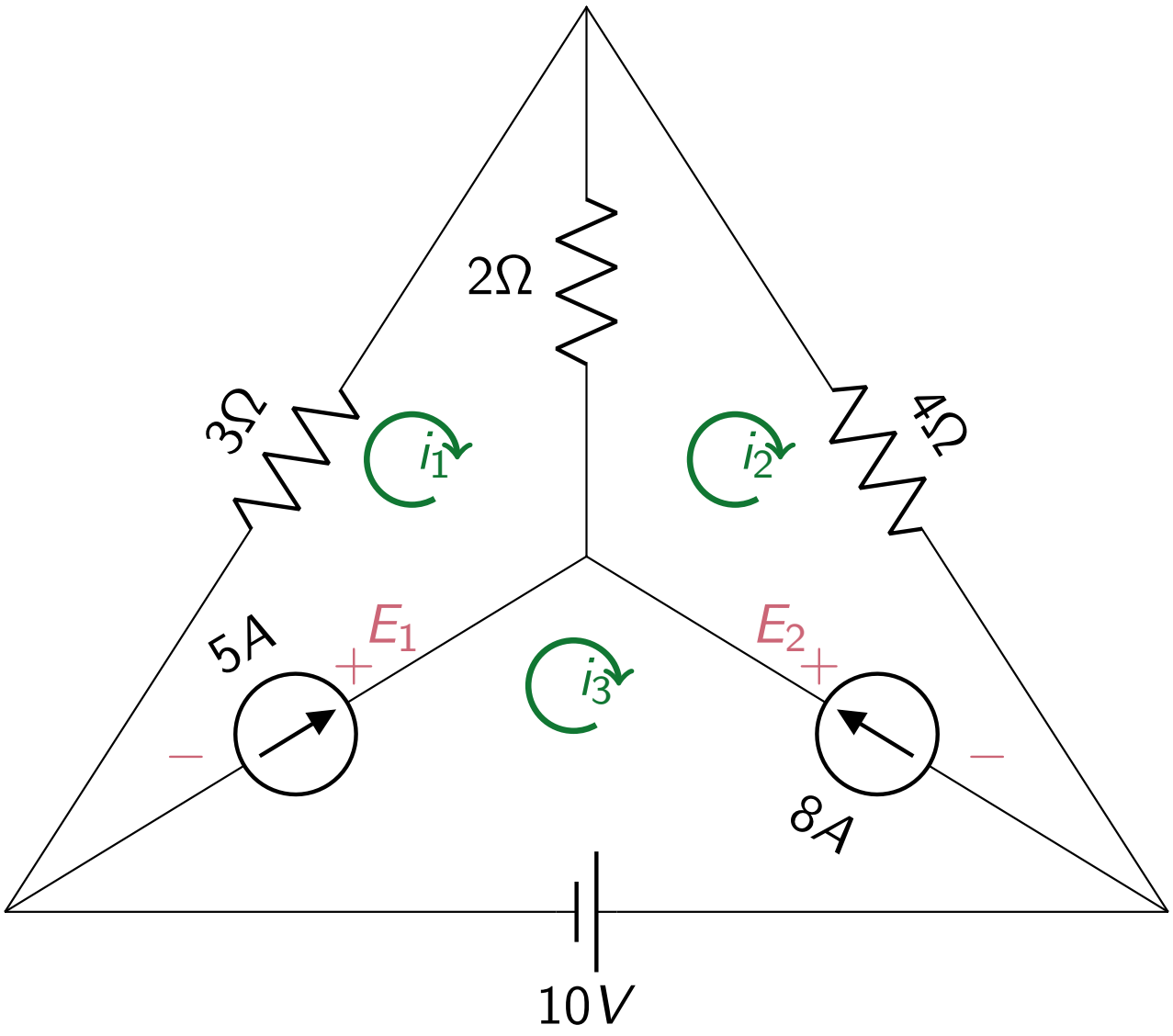
2Ω
3Ω
4Ω
i_1
i_2
i_3
5A
8A
E_1
E_2
+
−
+
−
10V

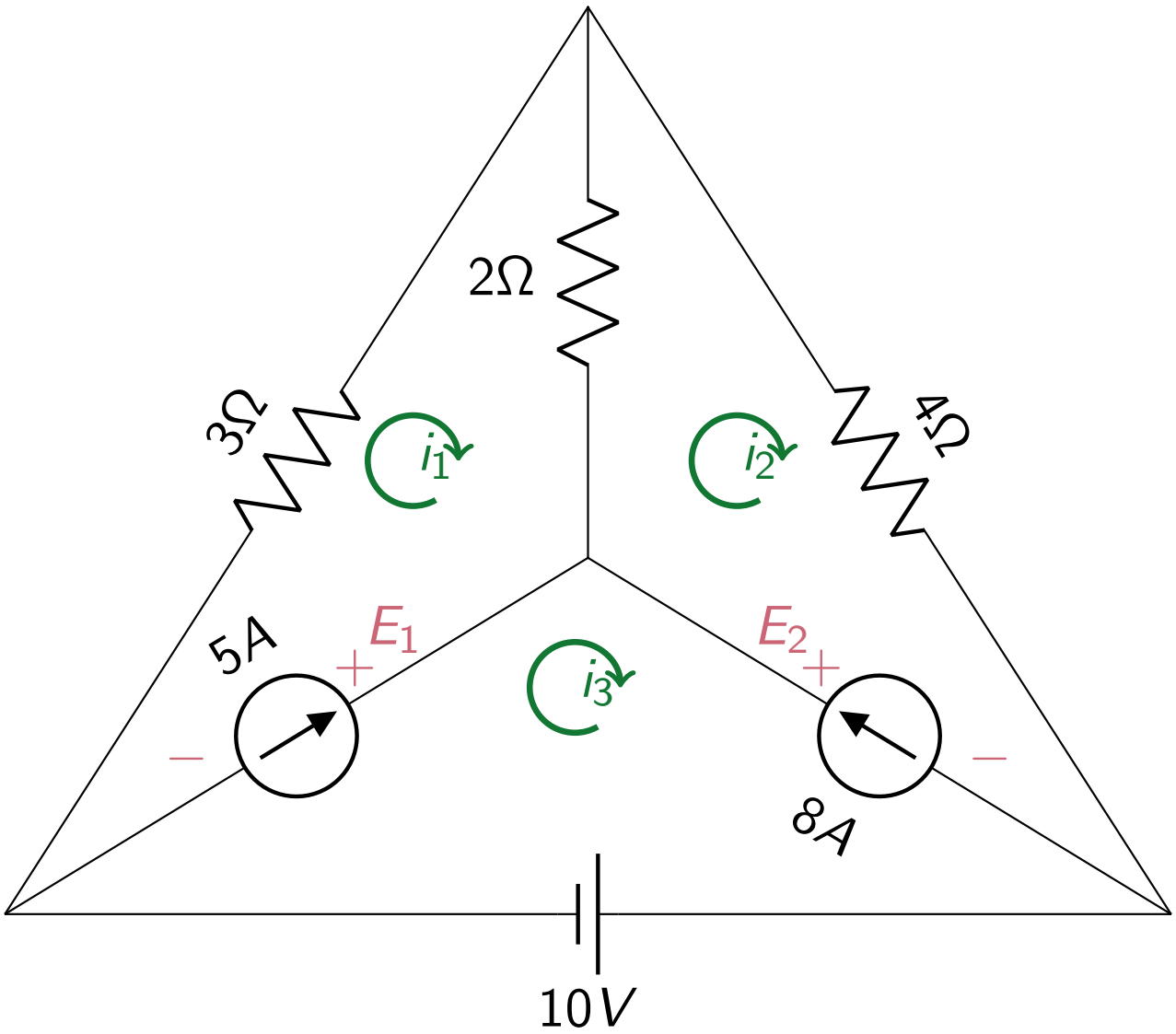

$i_1 \approx -8.8571$, $i_2 \approx 4.1429$, $i_3 \approx -3.8571$,

$E_1 \approx 52.5714$, $E_2 \approx 42.5714$

Equations from previous slide:

5A Current Source: $i_3 - i_1 = 5$

8A Current Source: $i_2 - i_3 = 8$

i_1 **Loop:** $3i_1 + 2(i_i - i_2) + E_1 = 0$

i_2 **Loop:** $2(i_2 - i_1) + 4i_2 - E_2 = 0$

i_3 **Loop:** $-E_1 + E_2 + 10 = 0$

$$\begin{array}{rcrcrcrcrcr}
-i_1 & + & 0i_2 & + & i_3 & + & 0E_1 & + & 0E_2 & = & 5 \\
0i_1 & + & i_2 & - & i_3 & + & 0E_1 & + & 0E_2 & = & 8 \\
5i_1 & - & 2i_2 & + & 0i_3 & + & E_1 & + & 0E_2 & = & 0 \\
-2i_1 & + & 6i_2 & + & 0i_3 & + & 0E_1 & - & E_2 & = & 0 \\
0i_1 & + & 0i_2 & + & 0i_3 & - & E_1 & + & E_2 & = & -10
\end{array}$$

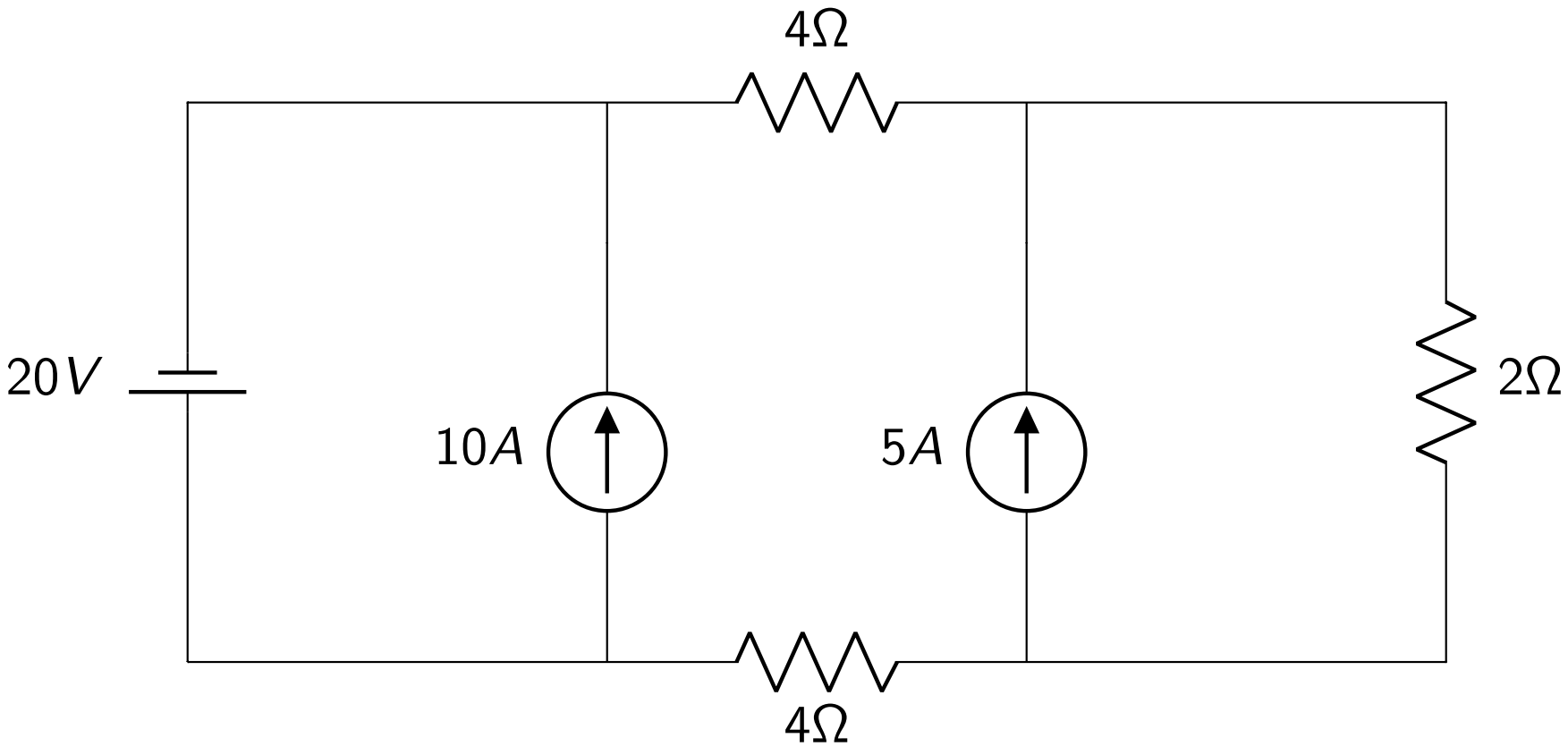
4Ω
20V
10A
5A
2Ω
4Ω

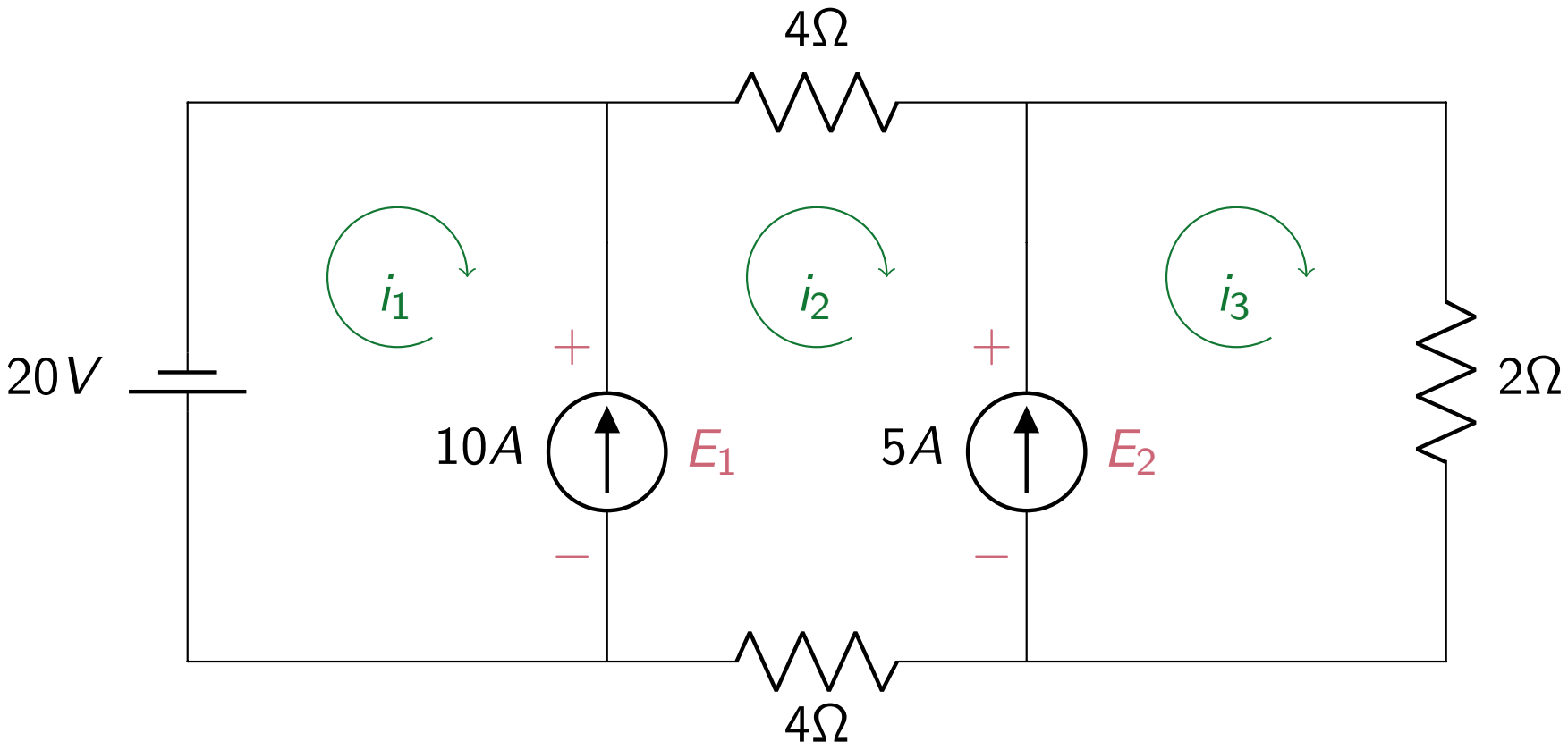
4Ω
i_1
i_2
i_3
20V
+
+
2Ω
10A
E_1
5A
E_2
−
−
4Ω

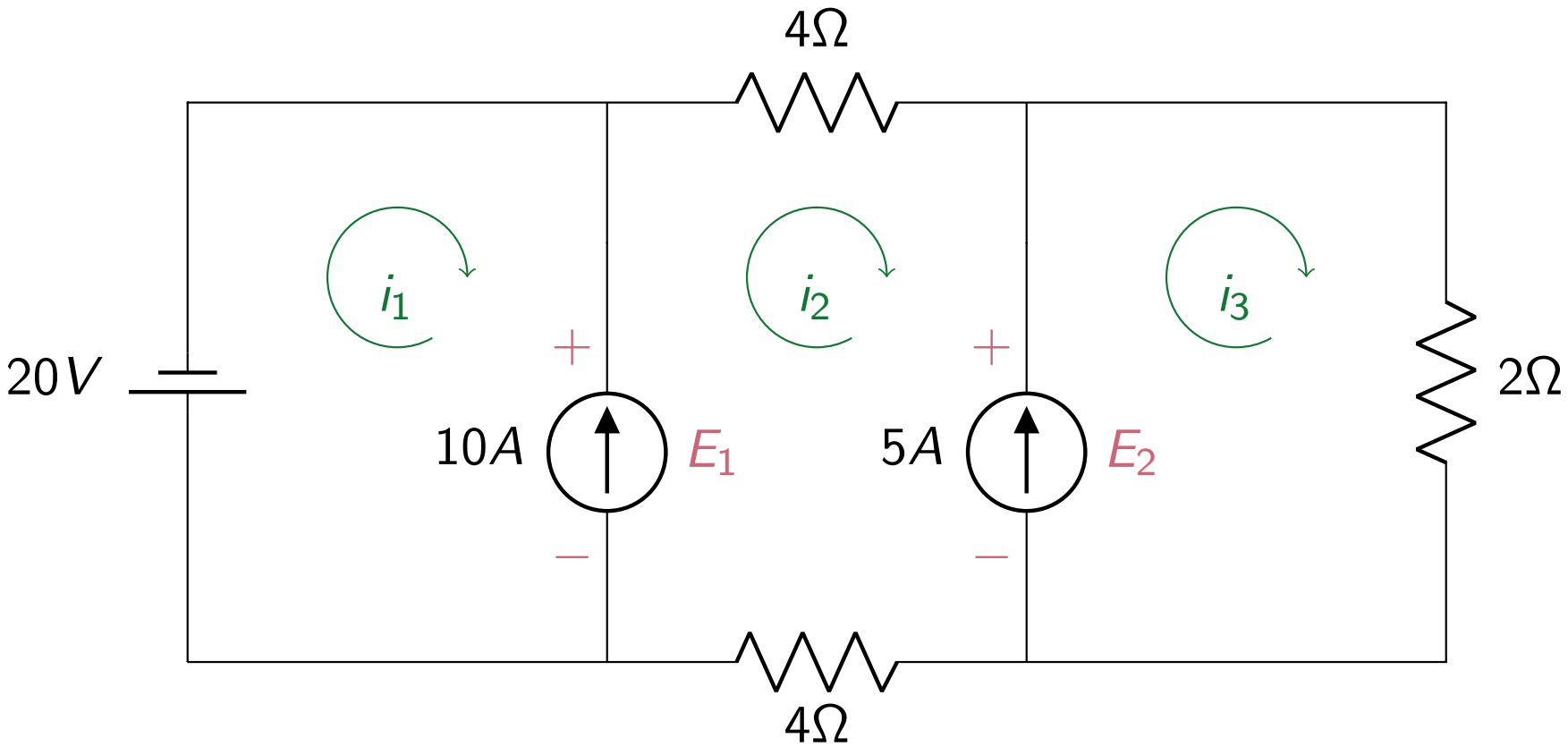

$i_1 = -13A, \quad i_2 = -3A, \quad i_3 = 2A, \quad E_1 = -20V, \quad E_2 = 4V$

Current across voltage source: 13A, top to bottom

Equations from previous slide:

10A Current Source: $i_2 - i_1 = 10$

5A Current Source: $i_3 - i_2 = 5$

i_1 **Loop:** $20 + E_1 = 0$

i_2 **Loop:** $4i_2 + E_2 + 4i_2 - E_1 = 0$

i_3 **Loop:** $2i_3 - E_2 = 0$

$$\begin{array}{rcrcrcrcrcr}
-i_1 & + & i_2 & + & 0i_3 & + & 0E_1 & + & 0E_2 & = & 10 \\
0i_1 & - & i_2 & + & i_3 & + & 0E_1 & + & 0E_2 & = & 5 \\
0i_1 & + & 0i_2 & + & 0i_3 & + & E_1 & + & 0E_2 & = & -20 \\
0i_1 & + & 8i_2 & + & 0i_3 & - & E_1 & + & E_2 & = & 0 \\
0i_1 & + & 0i_2 & + & 2i_3 & + & 0E_1 & - & E_2 & = & 0
\end{array}$$

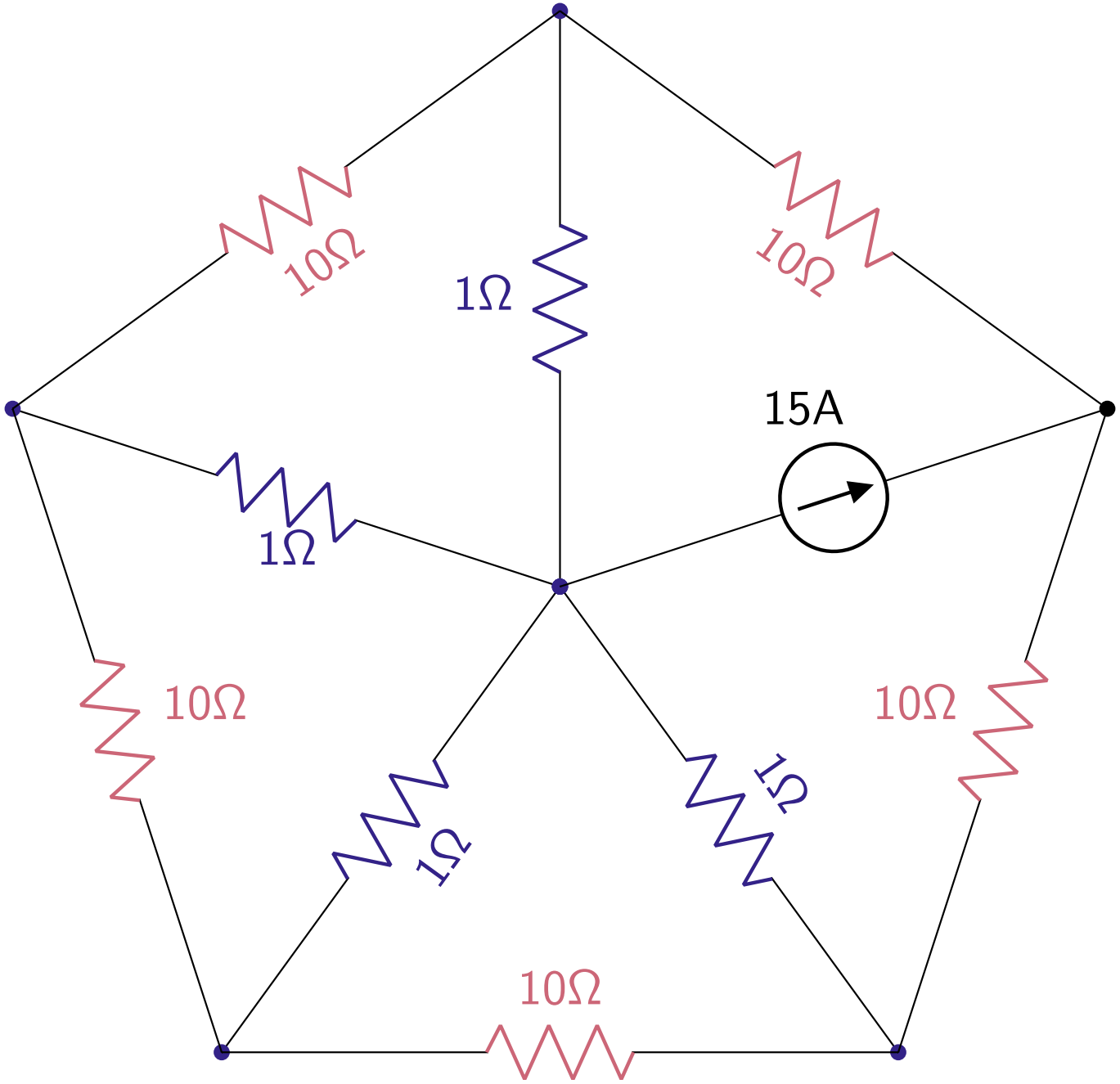
10Ω
1Ω
10Ω
15A
1Ω
10Ω
10Ω
1Ω
1Ω
10Ω

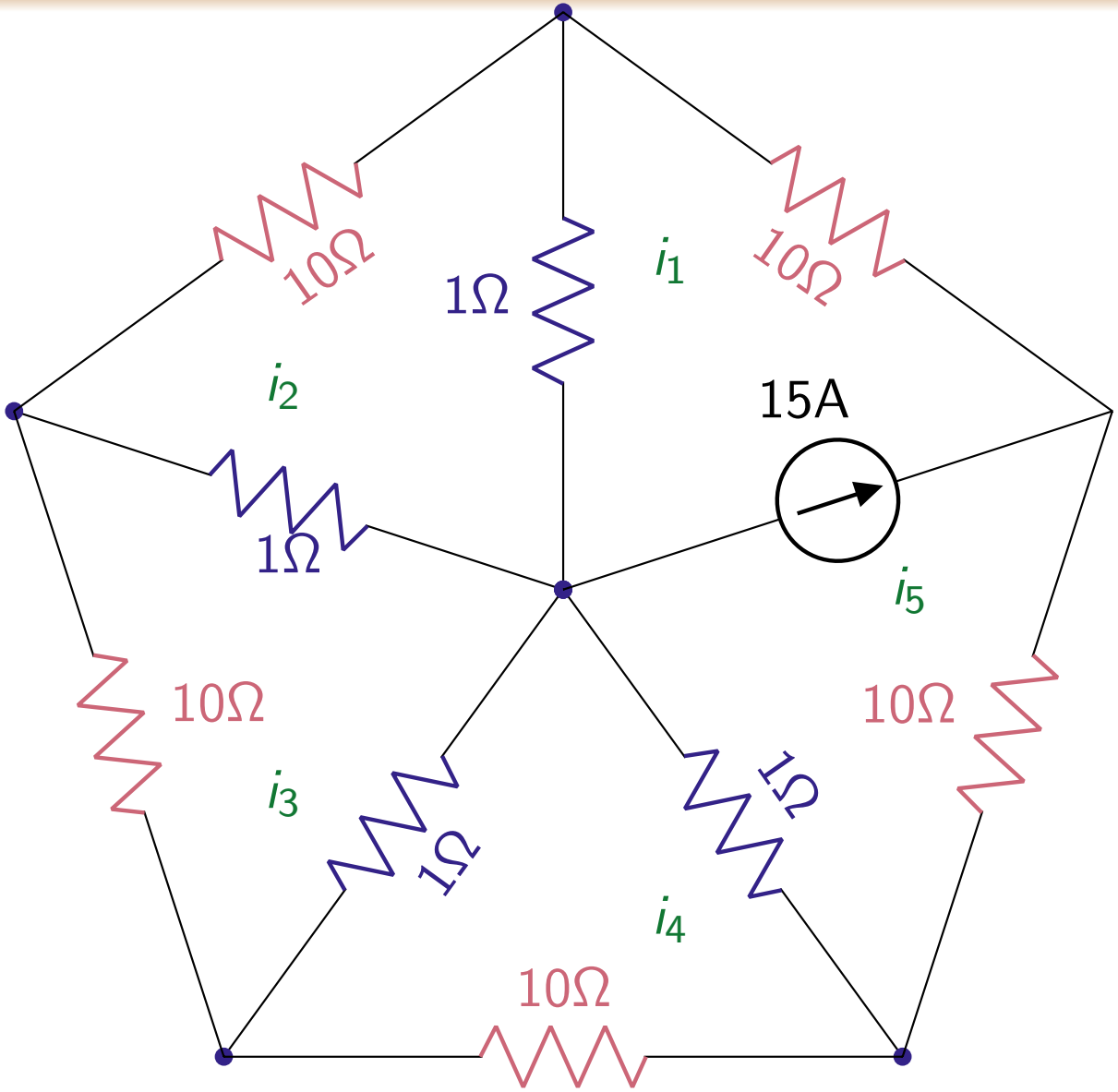

clockwise: $i_1 = -7.5, \quad i_2 = -1/12, \quad i_3 = 0, \quad i_4 = 1/12, \quad i_5 = 7.5$

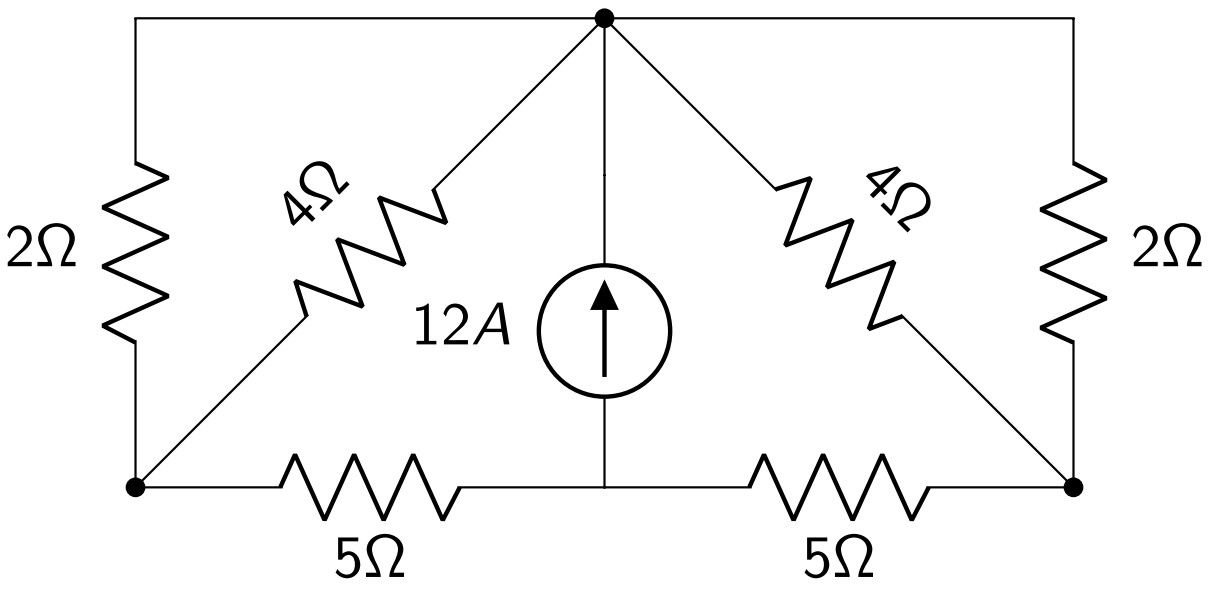

Find all branch currents.

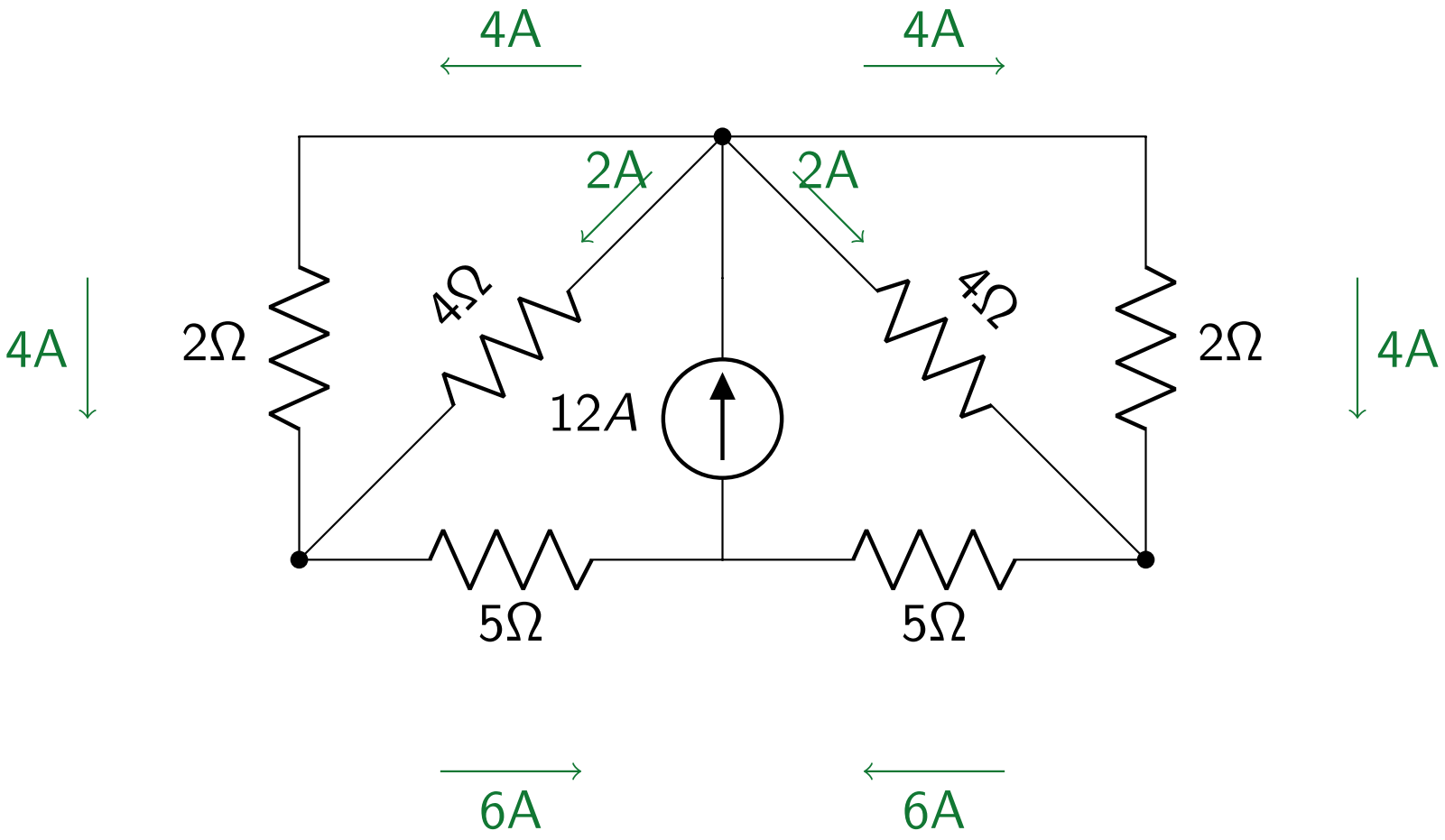

Find all branch currents.

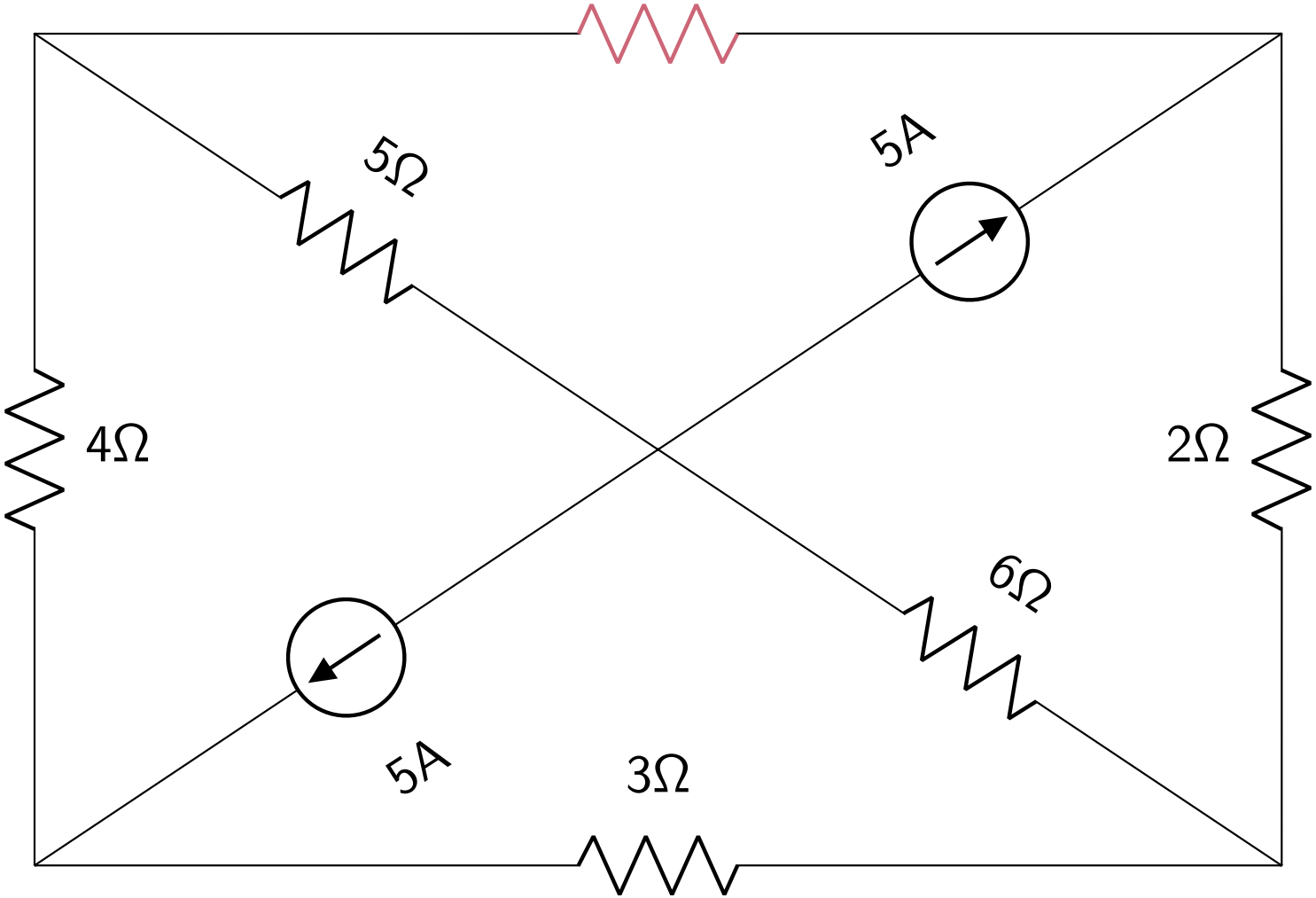

What resistance should the top resistor have, if you want each wire touching the centre to have current 5A?

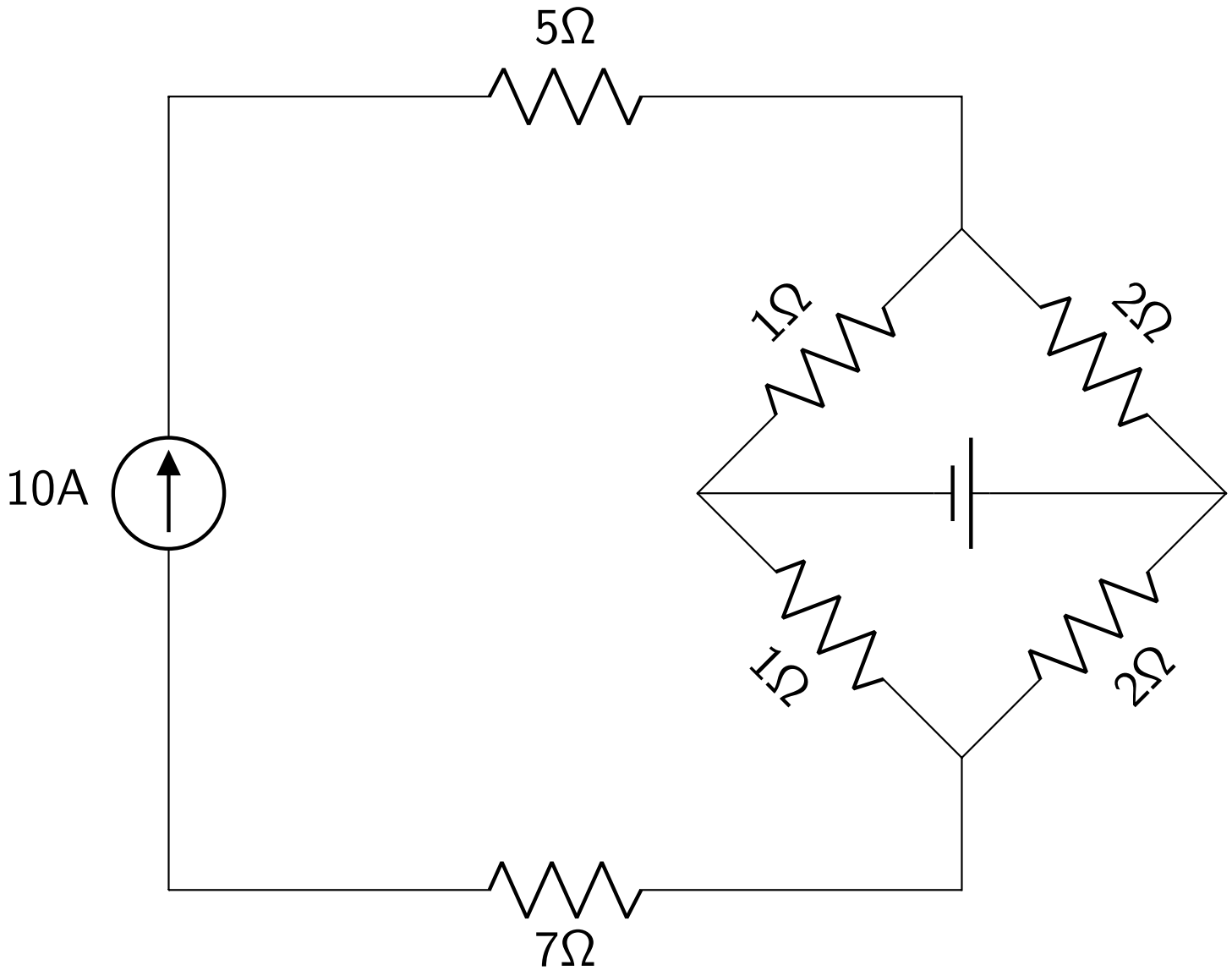

What voltage should the voltage source have, in order for there to be no current across it?

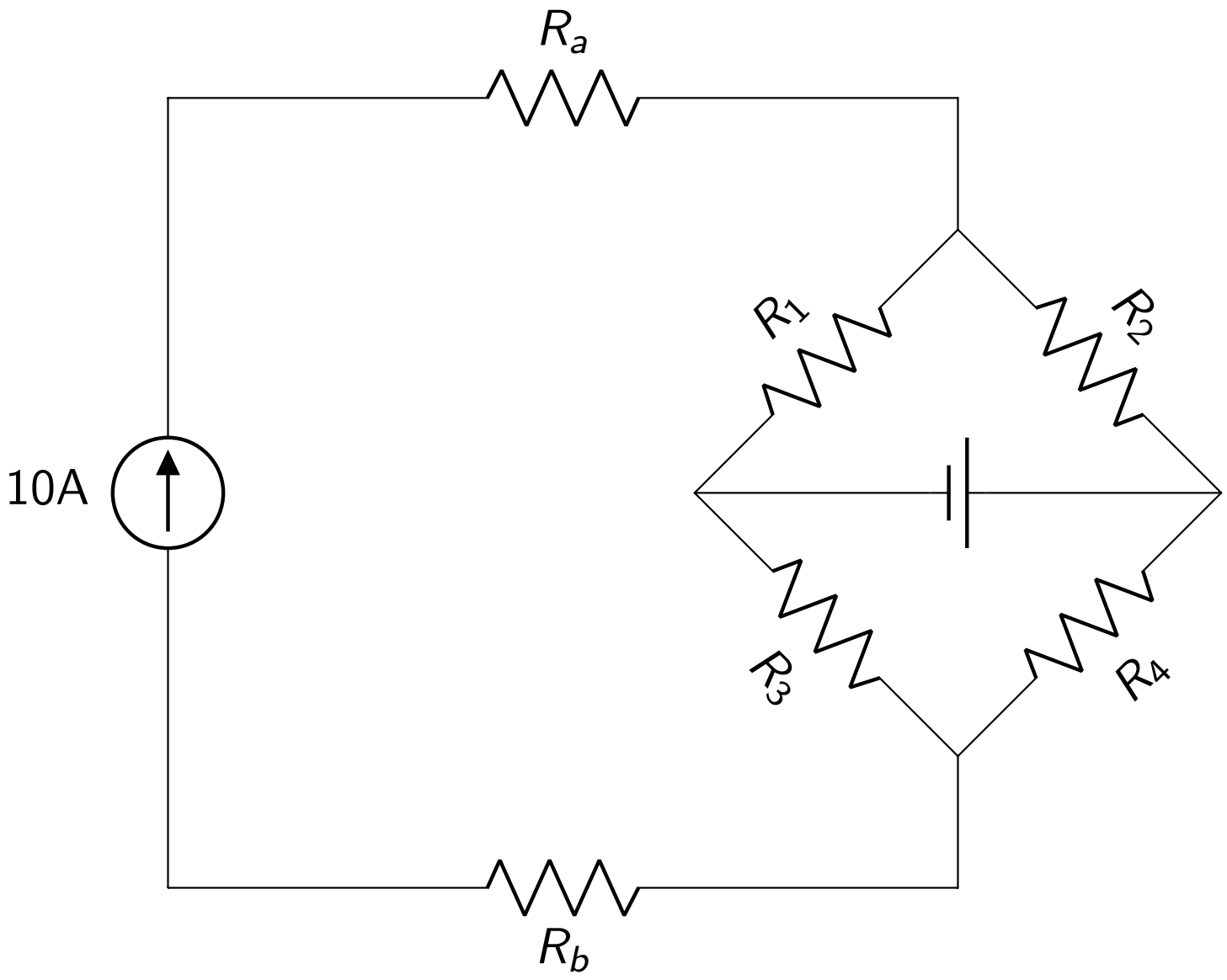

What voltage should the voltage source have, in order for there to be no current across it?